A1

GENERAL NOTES

A.01 - ALL DRAWINGS ARE TO BE READ IN CONJUNCTION WITH ALL RELEVANT SPECIFICATIONS, BILLS OF QUANTITIES, ARCHITECTURAL, SERVICES AND ENGINEERING DRAWINGS.

A.02 - ANY DISCREPANCIES BETWEEN THE ABOVE DOCUMENTS SHALL BE BROUGHT TO THE ATTENTION OF THE ENGINEER.

A.03 - ALL DIMENSIONS ARE IN MILLIMETRES, UNLESS NOTED OTHERWISE.

A.04 - DRAWINGS ARE NOT TO BE SCALED.

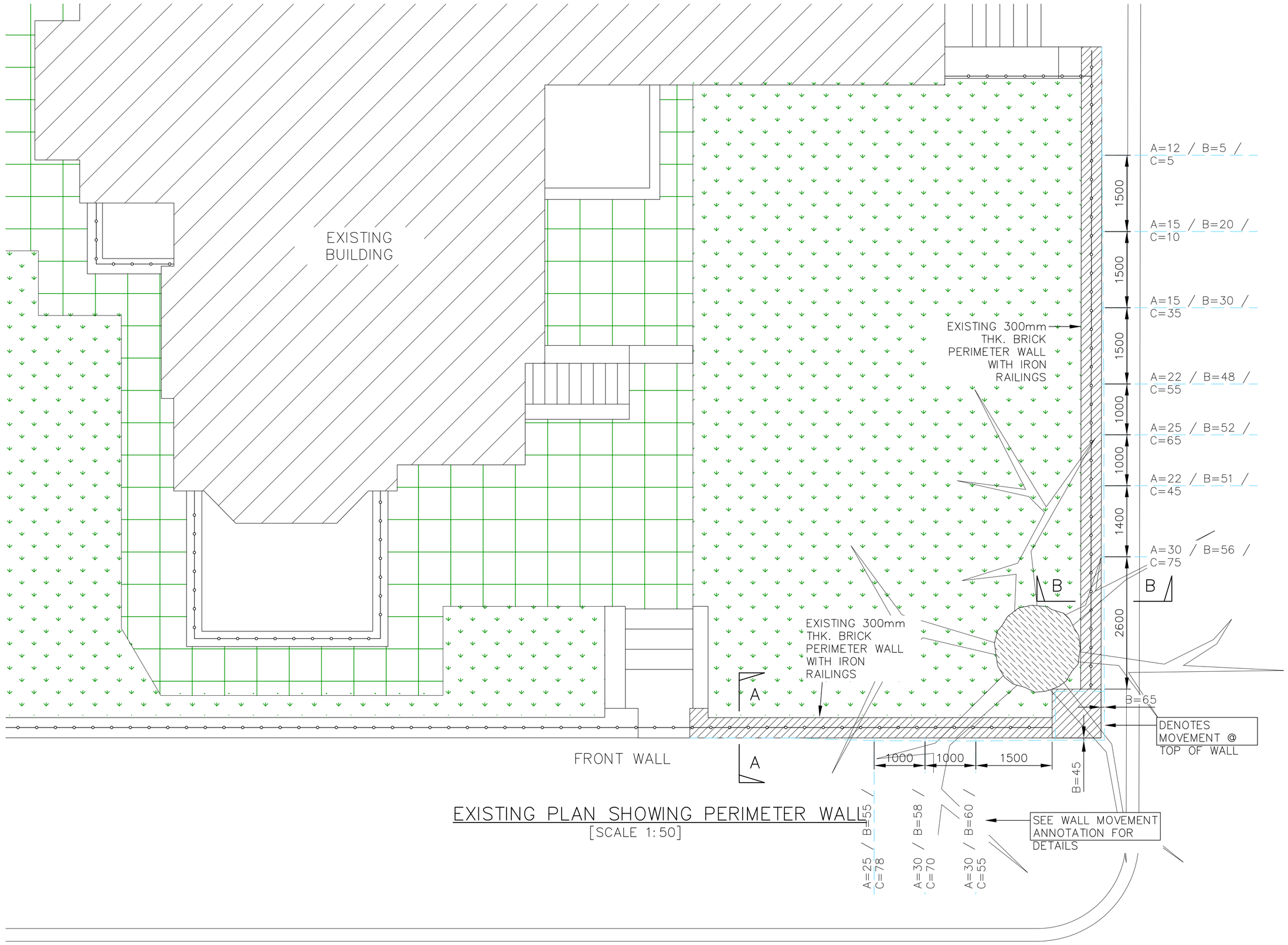

EXISTING PLAN SHOWING PERIMETER WALL
[SCALE 1:50]

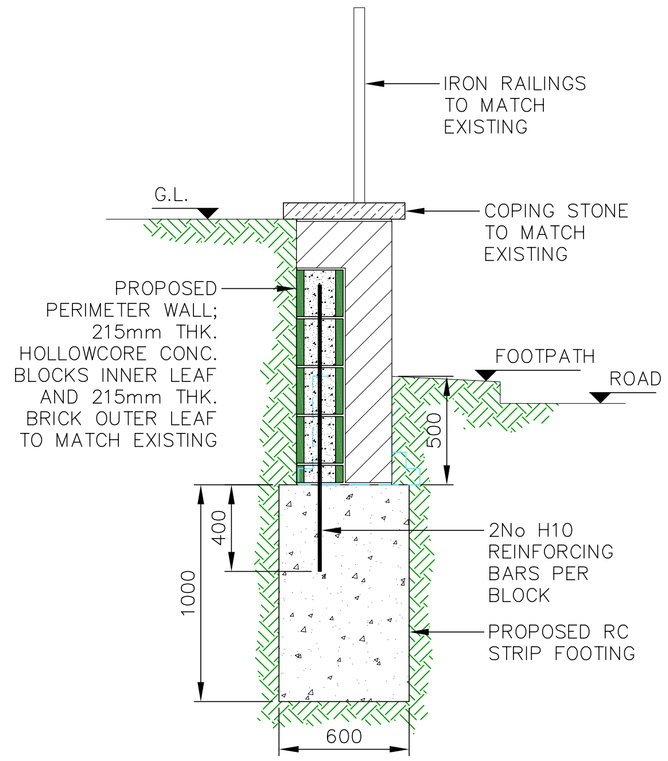

TYP. SECTION THRU' PROPOSED PERIMETER WALL
[SCALE 1:20]

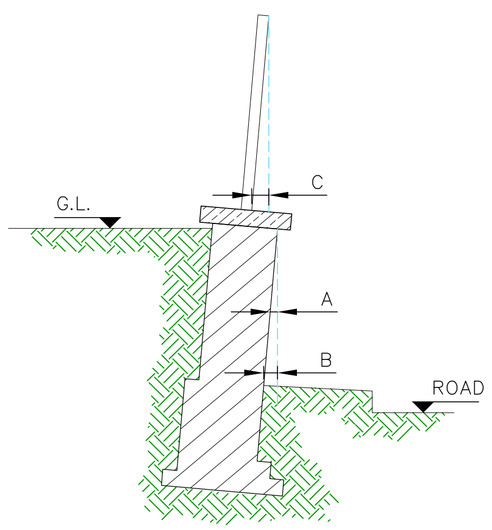

WALL MOVEMENT ANNOTATION
[SCALE 1:20]

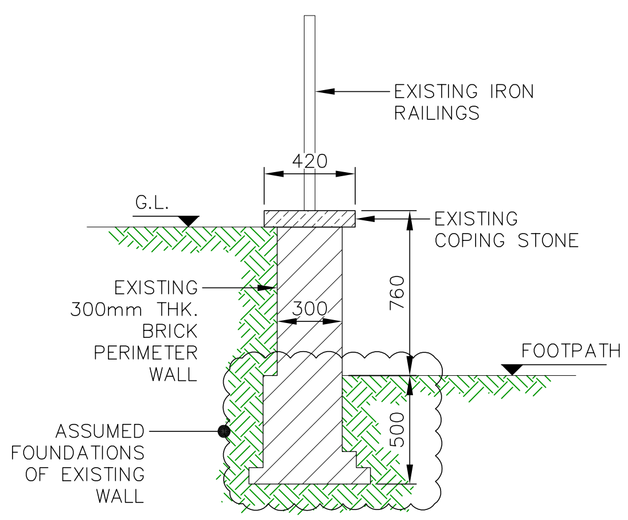

SECTION A–A THRU' EXISTING PERIMETER WALL
[SCALE 1:20]

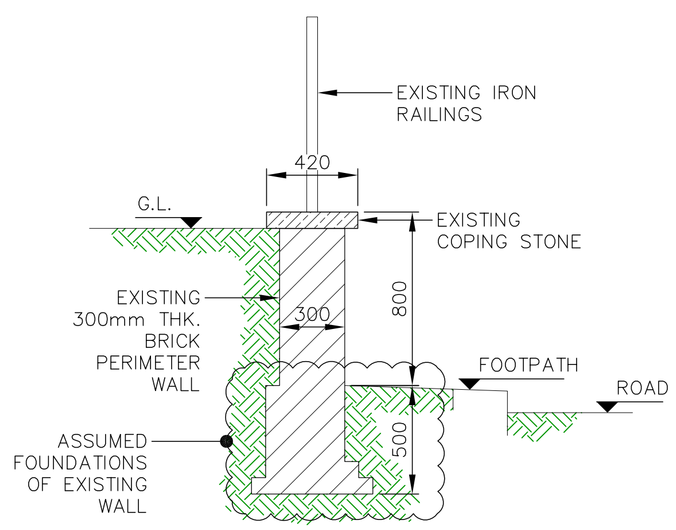

SECTION B–B THRU' EXISTING PERIMETER WALL
[SCALE 1:20]

Rev.	Date	Description	by	ch'd	app
D	01.03.12	Tree Trunk Shown	TH	FM	MR
C	31.01.12	Minor Amendments to Typical Section	TH	FM	MR
B	31.01.12	Issued For Information	TH	FM	MR
A	17.01.12	Issued For Comments	TH	FM	MR

Project: 19 Park Village Road

Title: General Arrangements of Survey to Perimeter Wall

Client: Ayad Al-Tuhafi Architects Ltd

Malachy Walsh and Partners
Consulting Engineers
Cork | Tralee | London | Limerick

Suite C2
City Cloisters
196 Old Street
London EC1V 9FR.

Tel : +44 (0)20 72530893
fax. : +44 (0)20 73367034
E-mail : drawing@mwalsh.co.uk

Scales (A1)	1:50 / 1:20	
Drawn	TH	13.01.12
Ch'd(D.O.)	-	-
Ch'd(Eng.)	FM	17.01.12
Approved	FM	17.01.12

Drg. No. 14022 - 1001

Rev. D