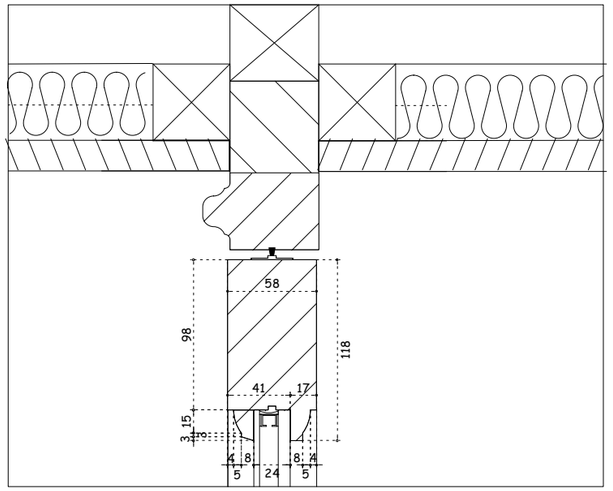

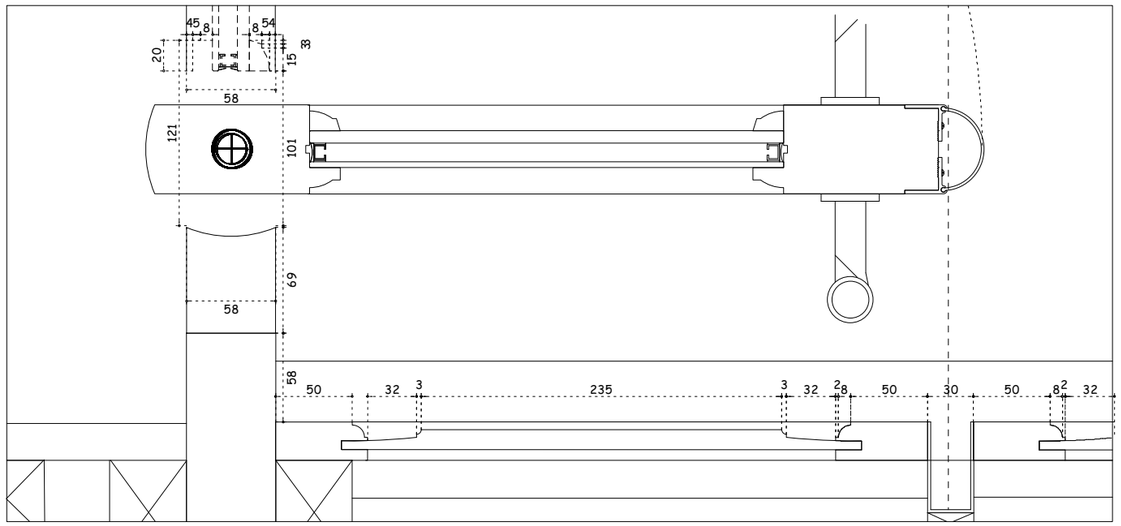

Typical door section scale 1:4

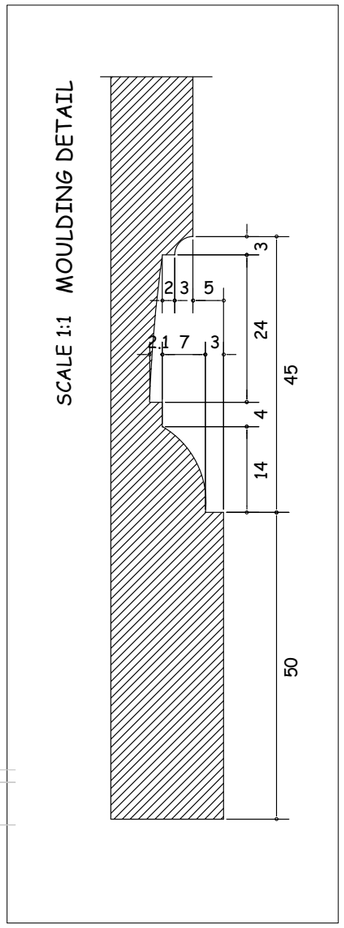

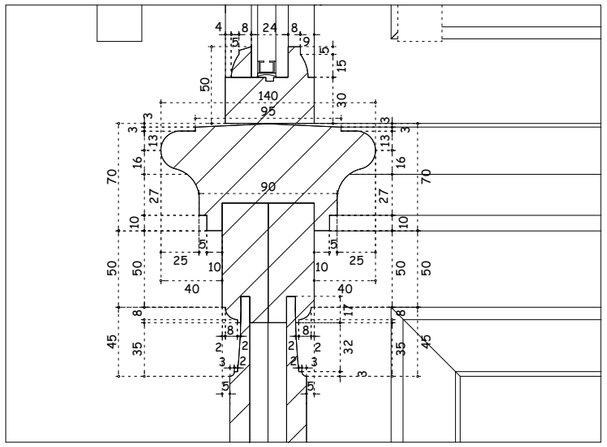

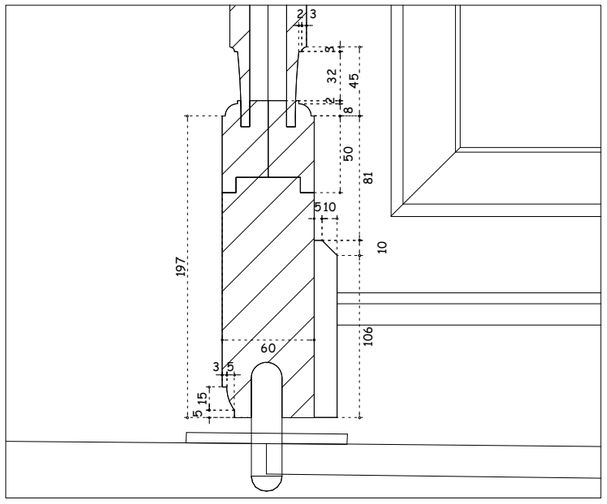

Typical shopfront with folding doors

scale 1:4

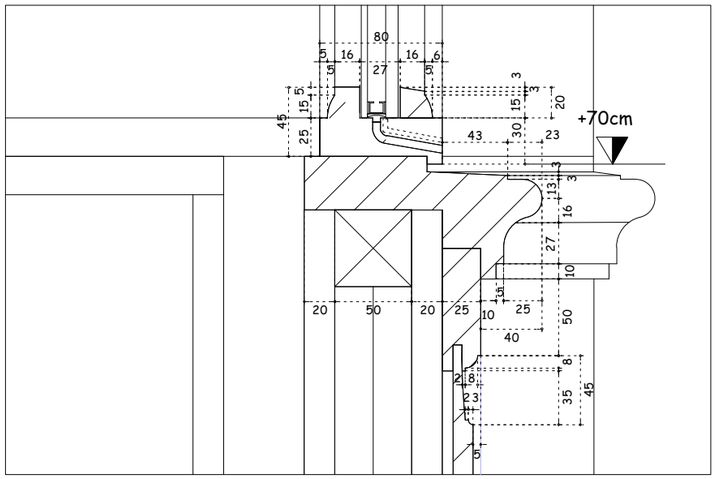

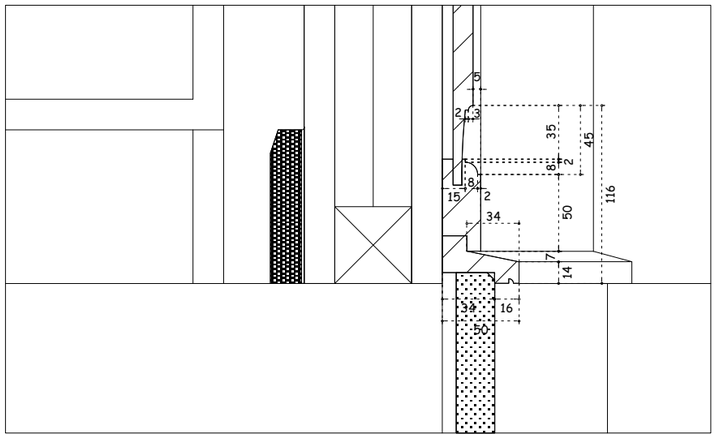

Typical shopfront with stallriser scale 1:4

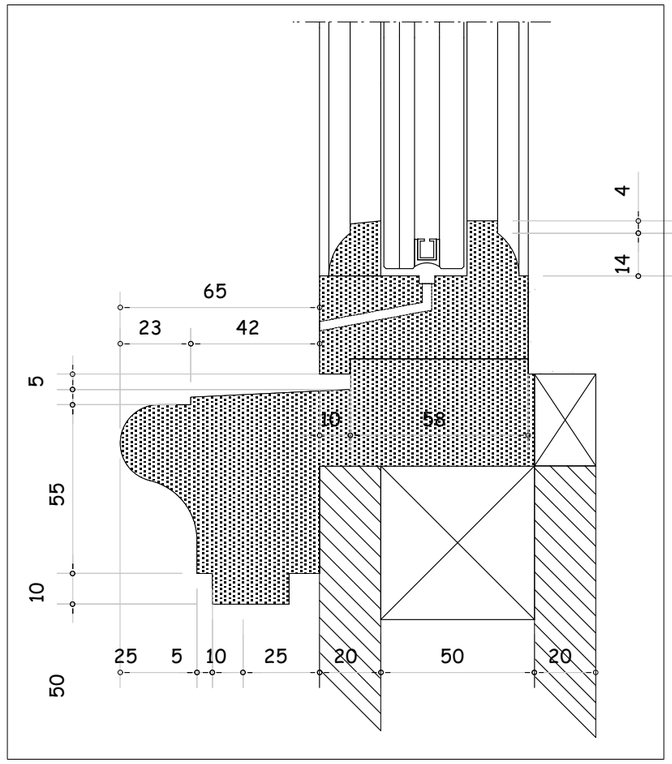

Typical cill section scale 1:2

DESIGN INTENT DRAWING ONLY
NOT FOR CONSTRUCTION
manufacturing drawing required for approval by client

PAUL

Client	PAUL UK PAUL		
Project	**KINGSWAY**		
Description	TYPICAL SHOPFRONT DETAILS		
Scale	VARIOUS	Date	15/06/2012
Drawn by	MK	Checked by	
Drawing no.	PAU KNG_500_04	Revision	
File Proj/Current/Draw		Command Dr	

The works indicated on this drawing are subject to a design risk assessment which is reappraised on each revision. Dimensions to be verified on site. Do not scale this drawing. Use figured dimensions only.
This drawing is the copyright of Paul UK Ltd. All copyright is reserved by them and any information contained may not be copied, reproduced, retained or disclosed without their prior consent in writing.

Paul UK 33 University Street London WC1E 6JN UK info@groupholder.com