DO NOT SCALE DRAWING

IF IN DOUBT ASK

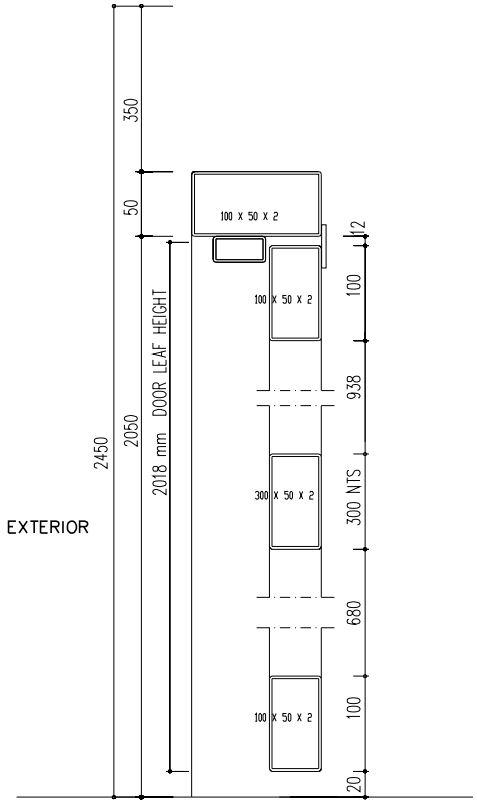

HEIGHT SECTION THRO' GRILLE GATE

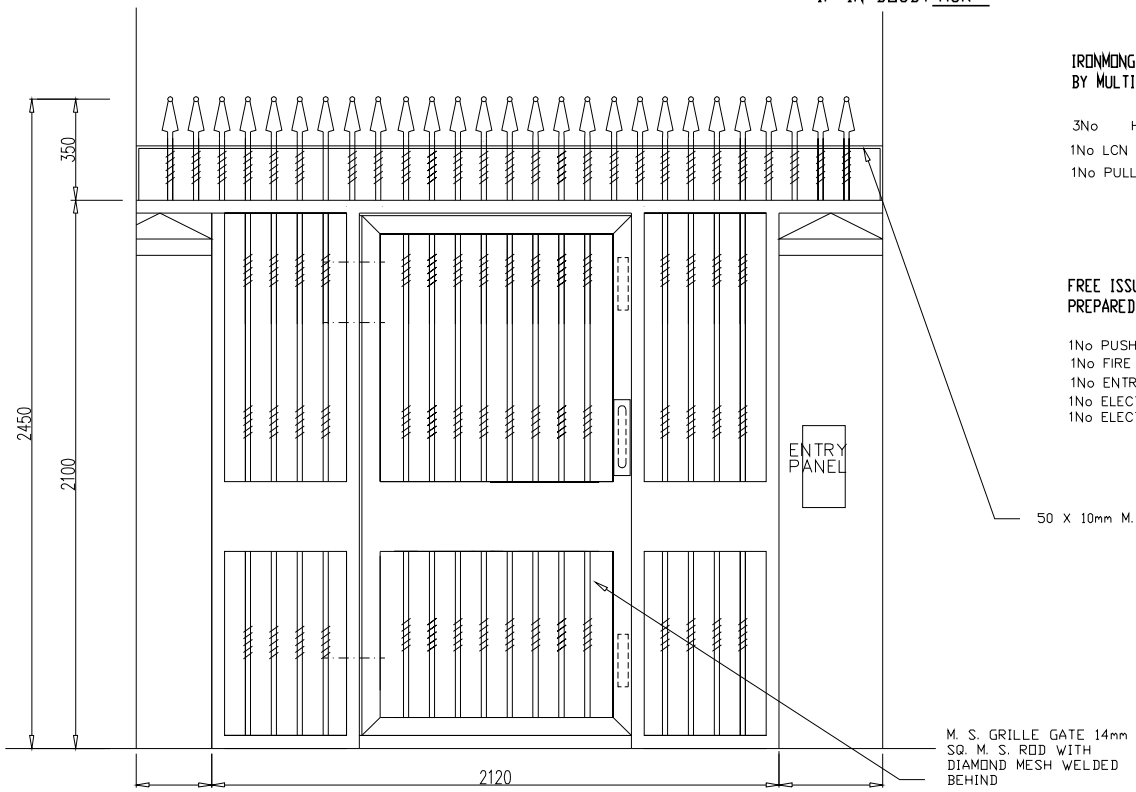

ELEVATION OF TYPICAL GRILLE GATE
HL01 DOOR OPENING IN AWAY FROM VIEWER

1No REQUIRED AS DRAWN HL01 FOR 1-15 STEADHAM CHAMBERS COPTIC ST. WC1A 1NL MANUFACTURE No 4404

IRONMONGERY SUPPLIED & PREPARED FOR BY MULTISTEEL PER GRILLE GATE.

3No HEAVY DUTY WELD ON HINGES
1No LCN 4010 SURFACE DOOR CLOSER
1No PULL HANDLE S/S 225 X 25

FREE ISSUE ITEMS SUPPLIED BY OTHERS BUT PREPARED FOR BY MULTISTEEL PER DOOR.

1No PUSH TO EXIT BUTTON ON INSIDE AWAY FROM GATE
1No FIRE MANS SWITCH
1No ENTRY PANEL
1No ELECTRO MAGNETIC LOCKS REF. M32C SERIES
1No ELECTRO MAGNETIC LOCKS REF. M32 SERIES

FINISH

ALL JANSEN SCREENS TO BE SHOT BLASTED & ZINC SPRAYED AND PPC TEXTURED GLOSS COLOUR REF. No RAL ????

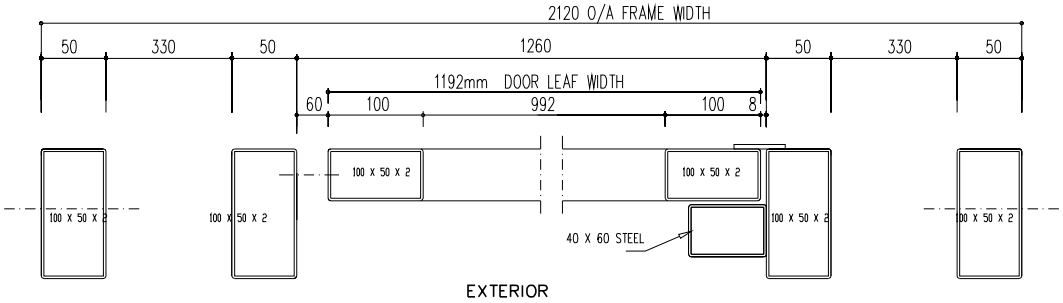

WIDTH SECTION THRO' GRILLE GATE

CONSULTANT

THIS DRAWING IS THE PROPERTY OF MULTISTEEL LIMITED AND MUST NOT BE COPIED OR DISCLOSED TO A THIRD PARTY WITHOUT THE WRITTEN PERMISSION OF MULTISTEEL LIMITED.

REV	DETAILS	DATE
0	ORIGINAL ISSUE	11-4-12

PROJECT CAMDEN YEAR 2

ISD LIMITED

DRAWN BY	DLP	DATE	11-4-2012
SCALE	NTS	APPROVED	
JOB No	J12038	DRG No	08

MULTISTEEL LIMITED

MULTISTEEL HOUSE
117-119 BRENT TERRACE
LONDON, NW2 1LL

TEL. 0208 208 8300 FAX 0208 208 8209