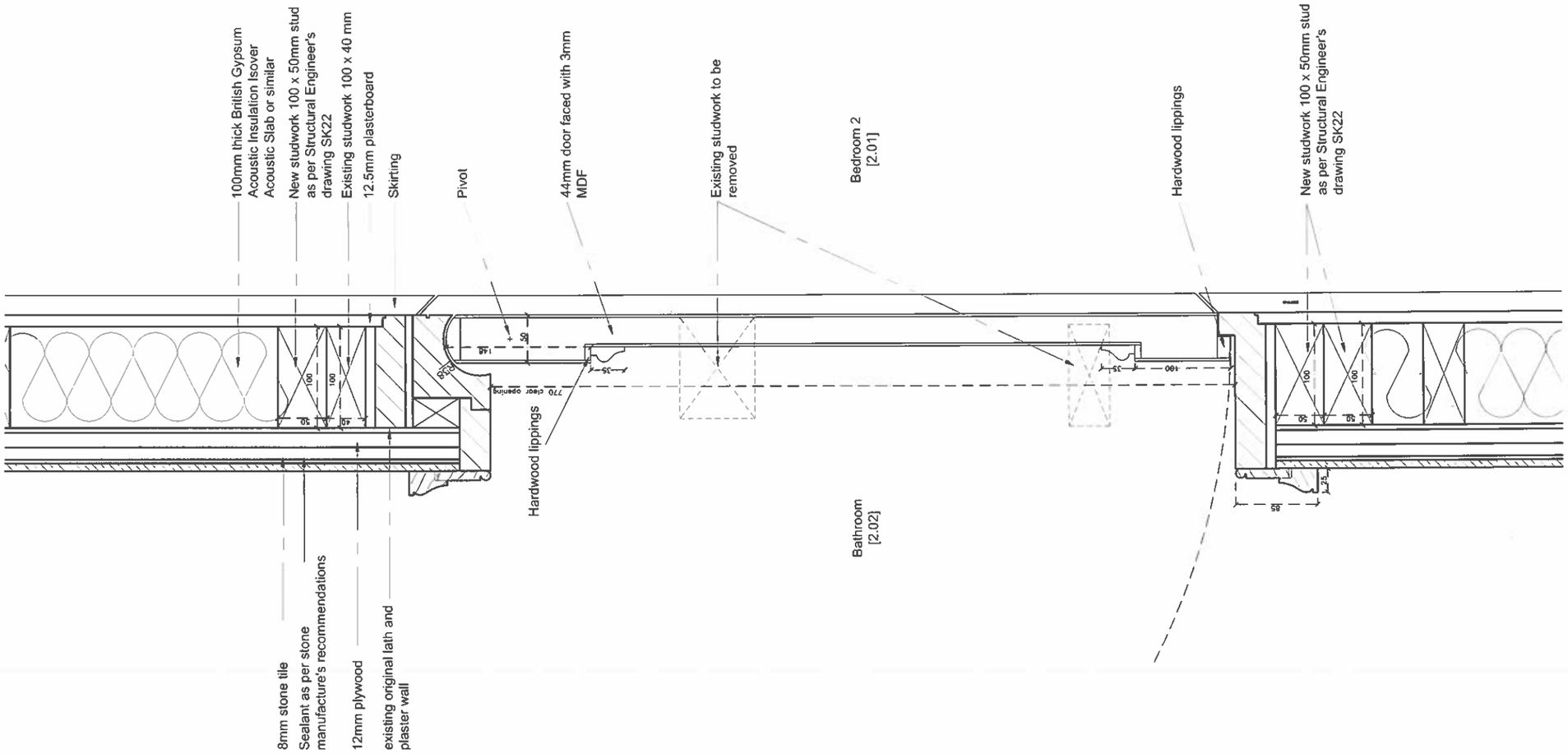

01 Proposed New Jib Door DS02 (plan)
1:5 @ A3

No.	NOTES (STATUS: F. FEASIBILITY S. SKETCH DESIGN P. PLANNING B. BUILDING CONTROL D. DESIGN DEV PRELIM M. MEASUREMENT T. TENDER C. CONSTRUCTION R. RECORD)
1	For construction use only if status 'C' and checked against current revision
2	All dimensions to be checked on site by contractor
3	Do not scale from this drawing
4	Unless otherwise indicated all dimensions are in millimetres

Rev	Date	Dwn	Auth	REVISIONS
-	04/12/2012	AXT	ACS	Issued for discussion.

DONALD INSALL ASSOCIATES LIMITED

CHARTERED ARCHITECTS
PLANNING CONSULTANTS

12 Devonshire Street London W1G 7AB Tel: 020 7245 9888 Email: london@insall-architects.co.uk

Job No 13 Jeffrey's Street, London, NW1

Title Jib Door DS02 Detail Plan

Job	Status
JEF13.02	T
No 3003	Rev -
Scale (A3) 1: 5 - -	

©2012 DONALD INSALL ASSOCIATES LIMITED

Last saved on 21/12/2012 filename:w:\jobs\jef13\drawings\work in progress\sheets layouts\tender\3 component - assembly\t3003 jib door ds02 plan.dwg by AXT