revison	date	author	revision notes
C1	06.12.12	GP	

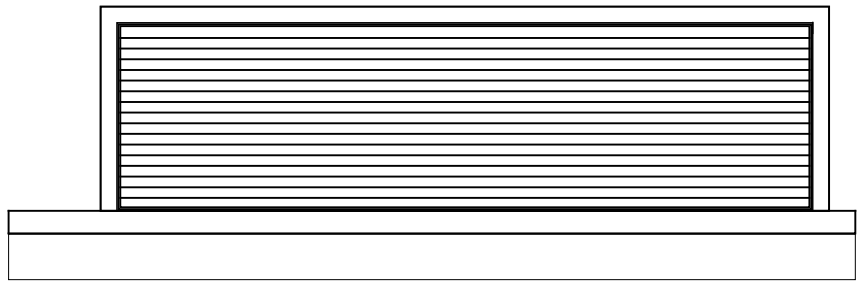

roof plan

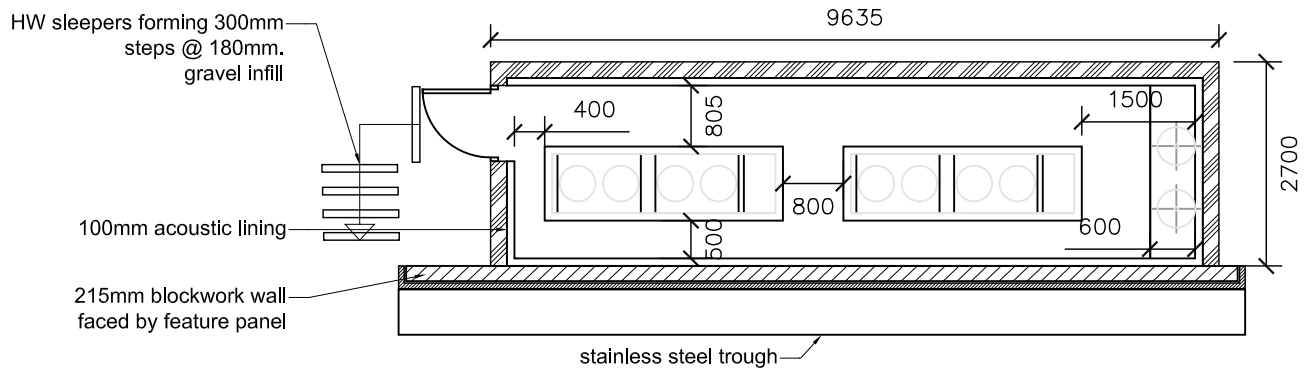

plan

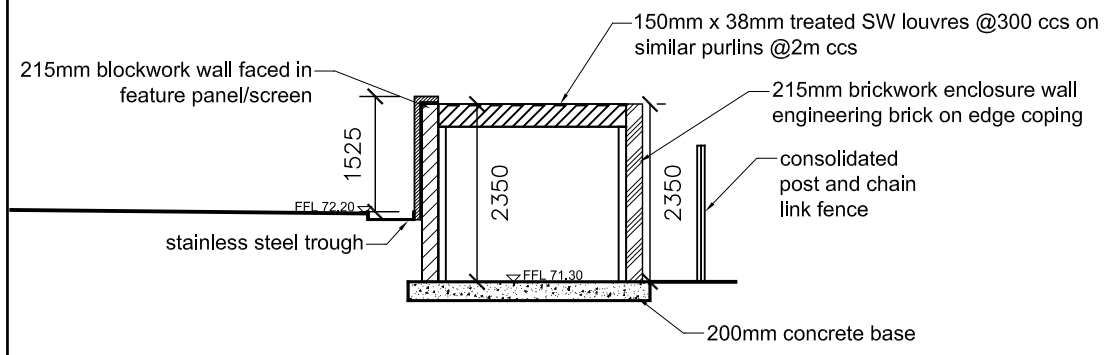

cross section

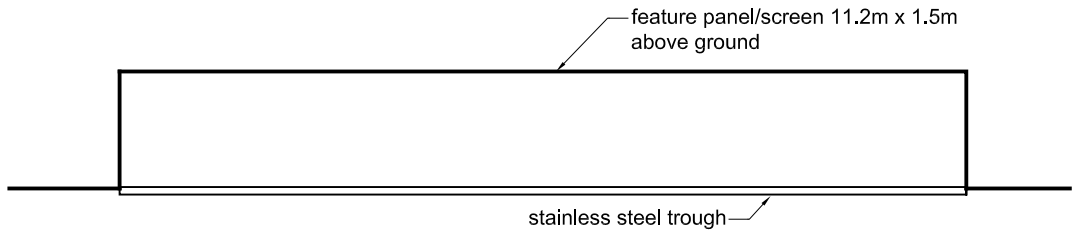

elevation

status

CONSTRUCTION

DO NOT SCALE FROM THIS DRAWING : Verify all dimensions on site

P K S architects

project	11 Netherhall Gardens NW3
site	Plant Enclosure
scale	1:100 @ A3
author	SL
date	29.10.12
job no.	758A
dwg no.	220-52
rev.	C2

© PKS Architects LLP 10 Deane House Studios, Greenwood Place, London, NW5 1LB t. 020 7424 4800 f. 020 7424 4801 e. pks@pksarchitects.com

PKS_A3L © PKS Architects LLP 2005