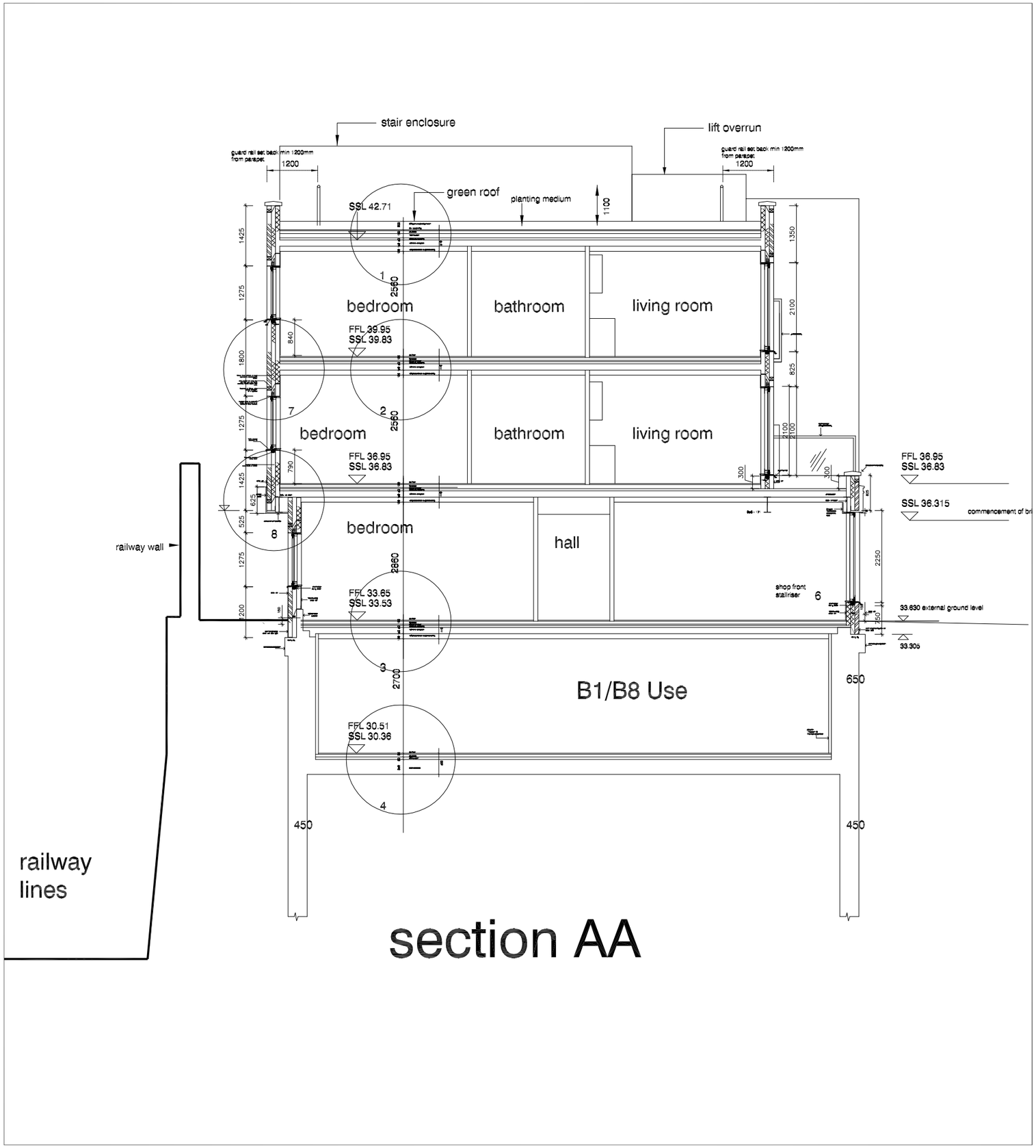

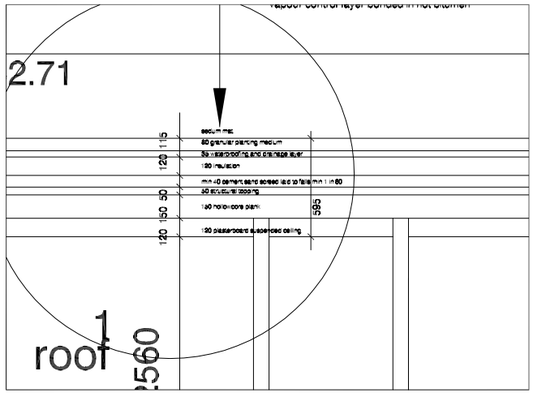

1

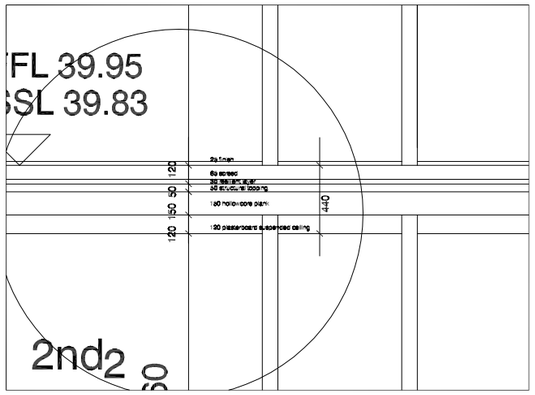

2

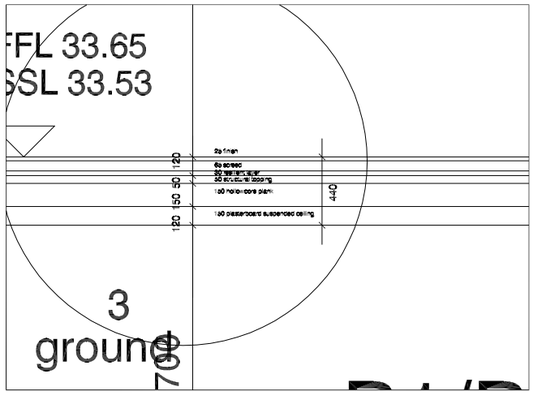

3

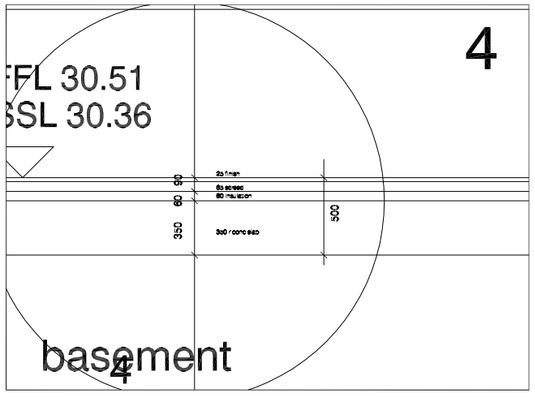

4

scales 1: 50 @ A1
1:100 @ A3

DVM
ARCHITECTS
4a Murray Street . London . NW1 9RE
Telephone 0207 485 2121 . Facsimile 0207 267 2527
e-mail: studio@dvmarch.com

Client
Damsonetti

Project
17a Murray Street
London NW1

Title
section AA
as proposed

Scale	Date	Job No.
1:50 1:20	11.03.09	1674

Drawing No.	Rev.
1674/011 Damsonetti	E

All dimensions are to checked on site.

© This drawing is copyright and remains the property of David & Victoria Mercer at all times and may not be reproduced in part or whole without written consent.