DOCKING POINT BOX
CONSTRUCTION DETAILS – (SCALE 1:10)

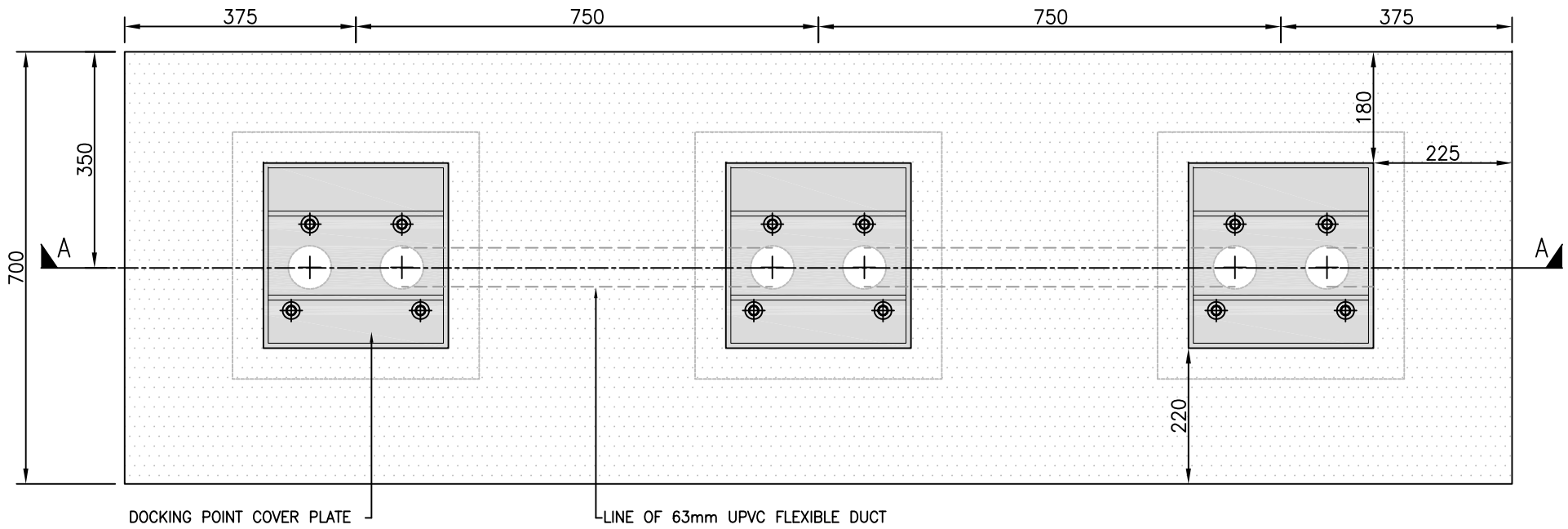

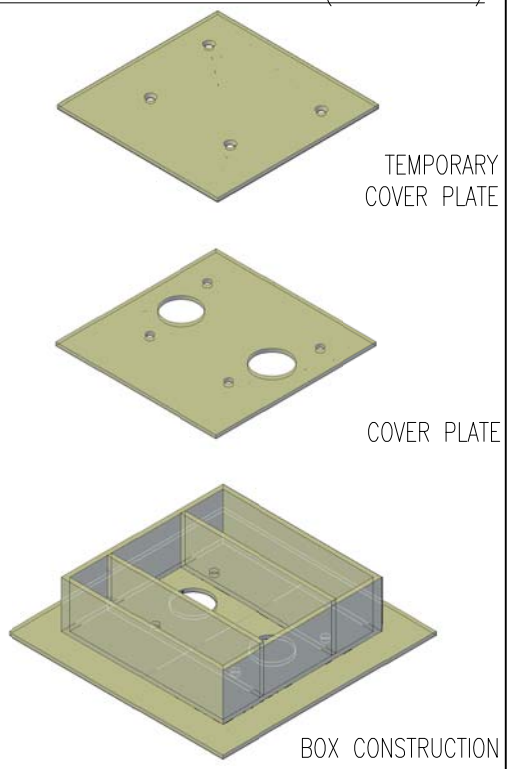

SECTION A–A

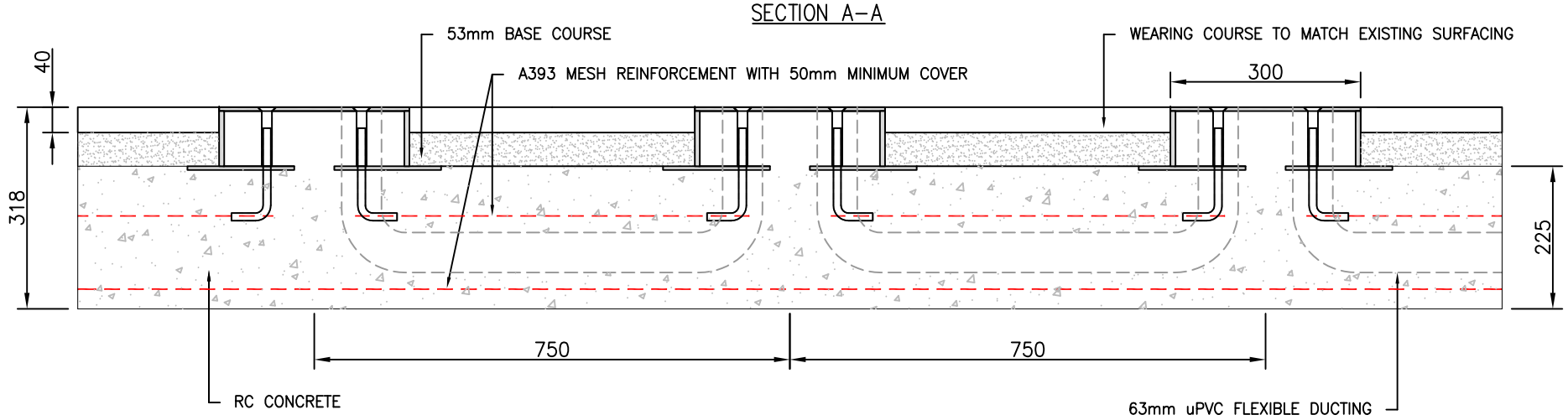

Roads Directorate
Traffic Design Engineering

Palestra
197 Blackfriars Road
London
SE1 8NJ

project	BARCLAYS CYCLE HIRE SCHEME
drawing title	Standard Linear Foundation Carriageway –
borough	–
site no.	–

date	scale	drn	chk	app
22/10/12	1:10 @ A3	AH	DP	AS

Dwg N° TDE–CW–01–PL
rev A
status FOR INFORMATION

Rev	Date	Description	Drn	Chk	App
A	29/11/12	MINOR AMENDMENTS	JMG	AB	AS

© Crown copyright and database rights 2011 Ordnance Survey 100035971

S:\TDE\Scheme Information\All Areas\Cycle Hire Phase 3\Site documents\STANDARD DETAILS\STANDARD DETAILS_FOR PLANNING.dwg.