KEY:

= New elements to match existing adjacent

= Elements to be removed

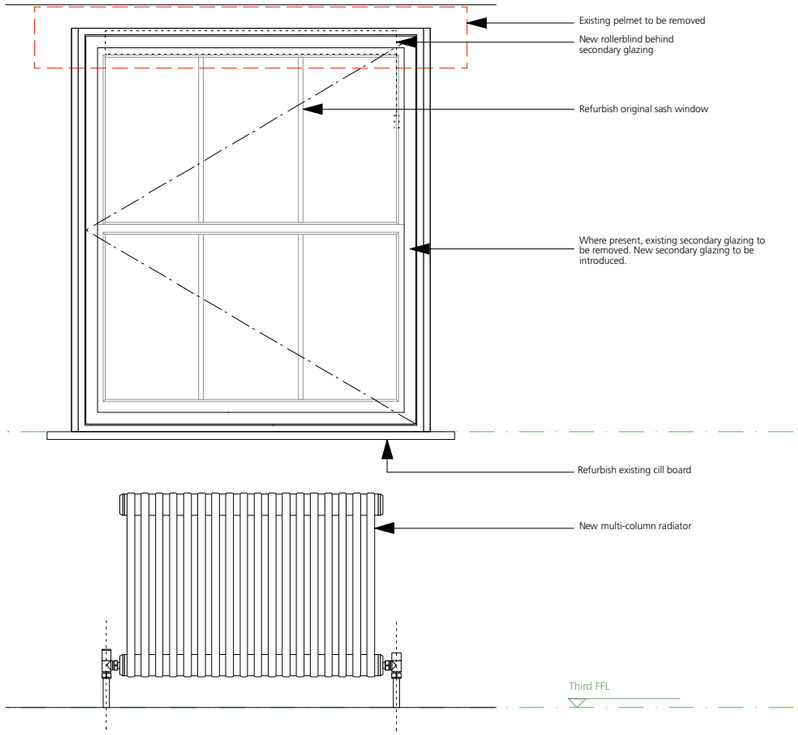

1 - **Typical Elevation - Proposed**
1:10 @ A1, 1:20 @ A3

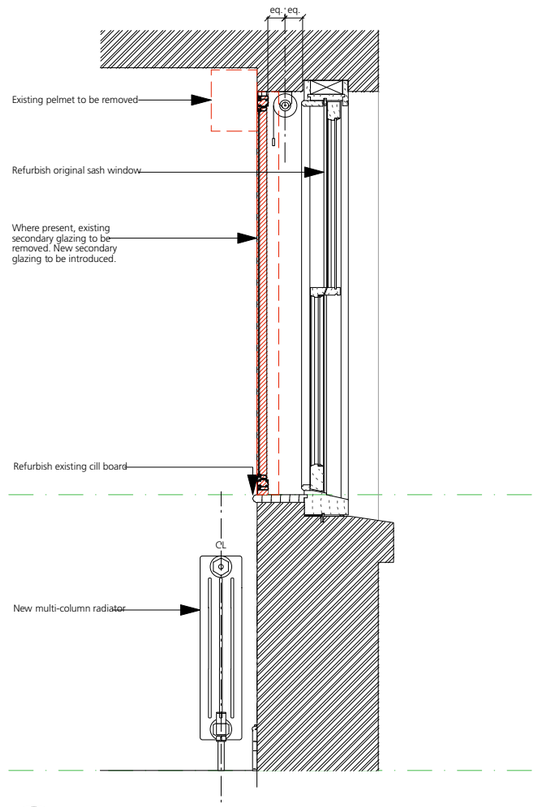

3 - **Typical Section - Proposed**
1:10 @ A1, 1:20 @ A3

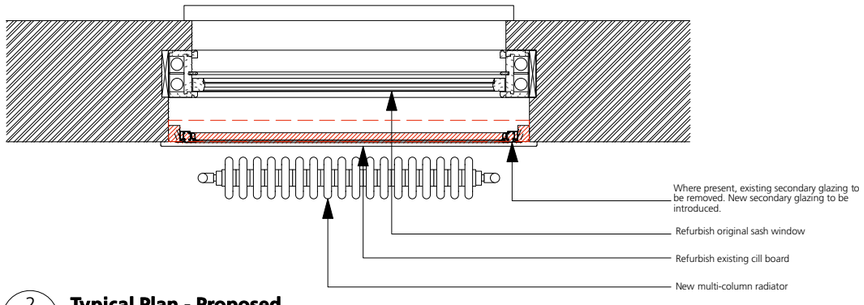

2 - **Typical Plan - Proposed**
1:10 @ A1, 1:20 @ A3

Revision	Date	Amendment	Notes
	08.03.13	Issued for Planning	

NO DIMENSIONS ARE TO BE SCALED FROM THIS DRAWING. THE CONTRACTOR/MANUFACTURER IS RESPONSIBLE FOR CHECKING ALL DIMENSIONS AND QUERYING ANY DISCREPANCIES. THIS DRAWING IS THE PROPERTY OF NBA ARCHITECTS LTD. COPYRIGHT IS RESERVED BY THEM AND THE DRAWING IS ISSUED ON CONDITION THAT IT IS NOT COPIED, REPRODUCED, RETAINED OR DISCLOSED TO ANY UNAUTHORISED PERSON, EITHER WHOLLY OR IN PART, WITHOUT WRITTEN CONSENT.

Client: University College London
Project: 31 Tavistock Square, London, WC1H 9EZ
Drawing: Typical Existing Window Type 03

Scale: 1:10 @ A1, 1:20 @ A3
Date: NOV 2012
Status: PLANNING
Drawn: GN

Project N°: 479
Drawing N°: 479/A(31)/253
Revision: /

burwell deakins : architects
t 020 8305 6010
f 020 8305 6020
e info@burwellarchitects.com
w www.burwellarchitects.com
a unit 0.01 california building deals gateway london SE13 7SF