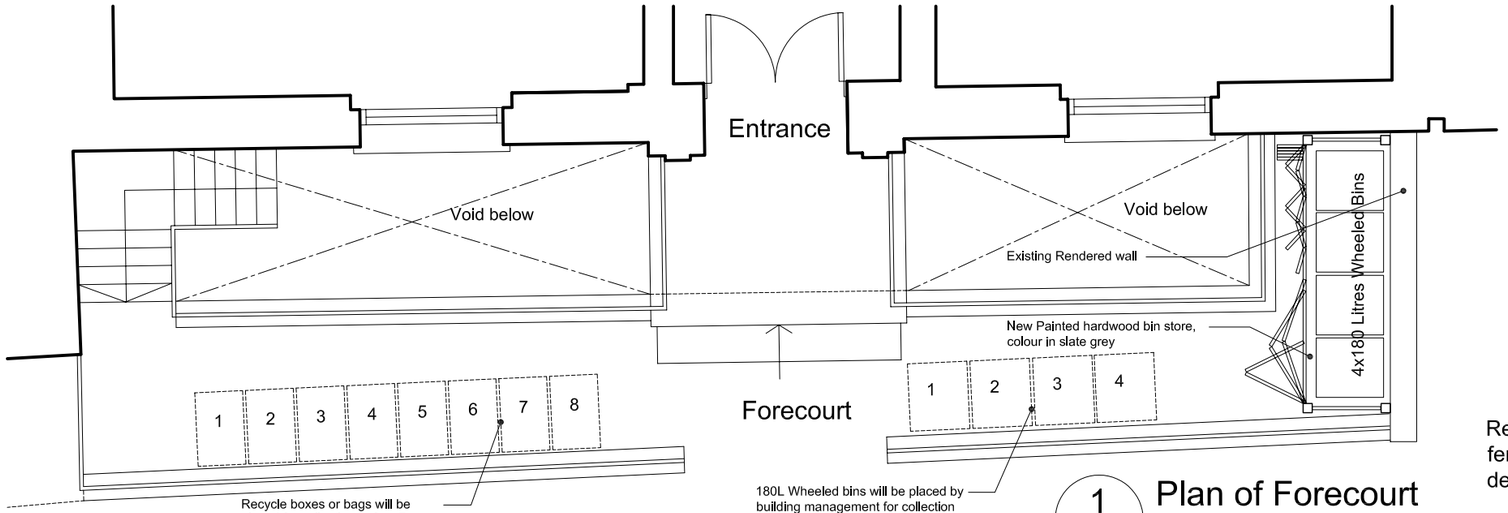

1 Plan of Forecourt
Scale 1:50

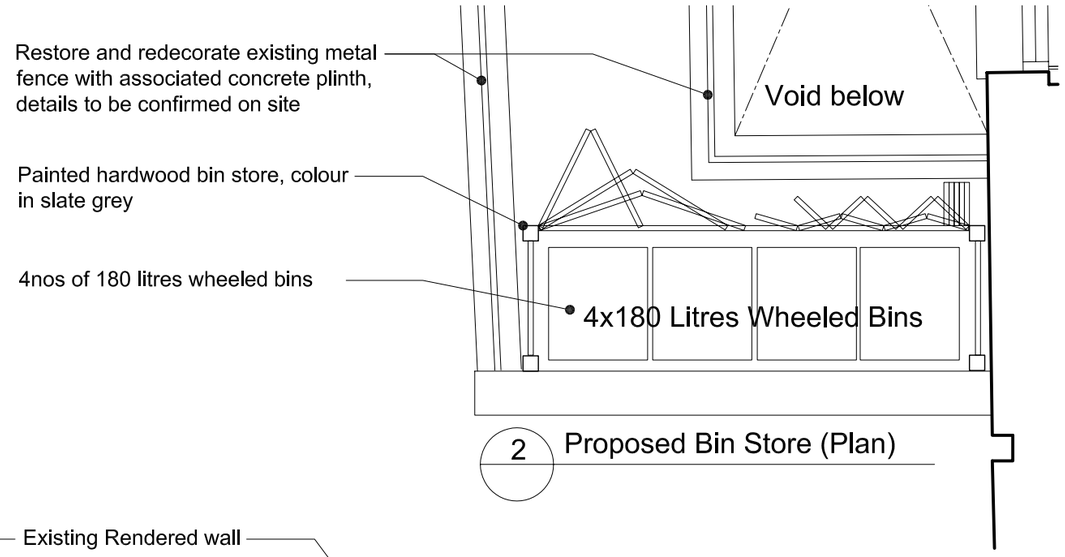

2 Proposed Bin Store (Plan)

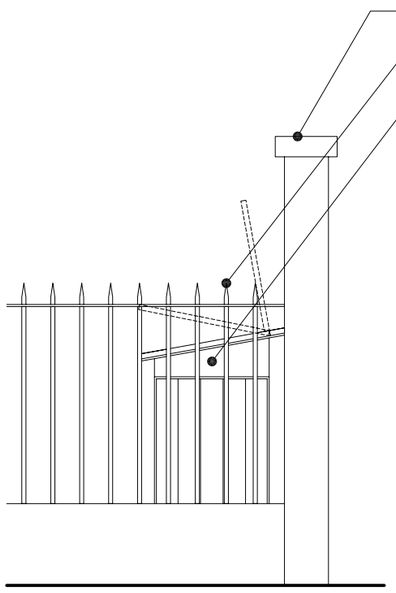

3 Proposed Elevation view from the street

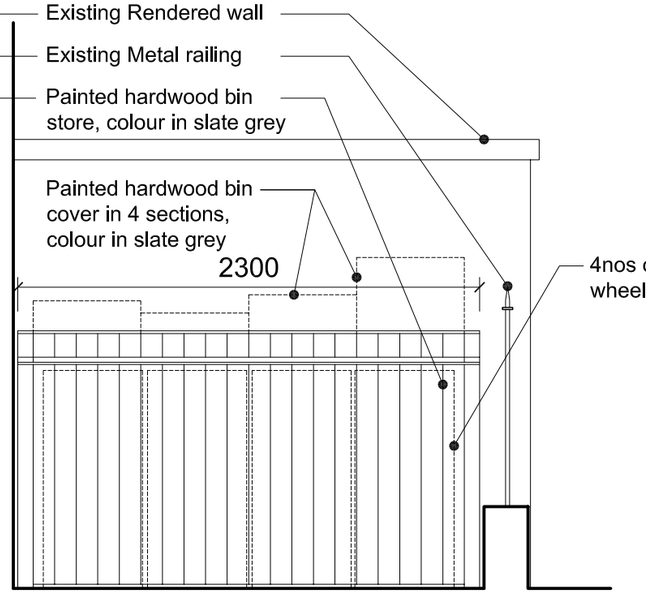

4 Proposed Bin store

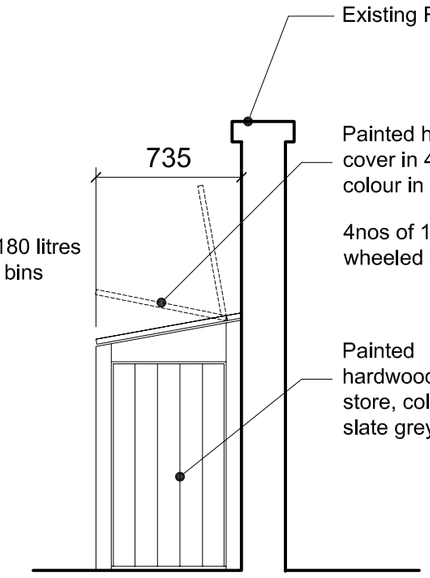

5 Proposed side elevation

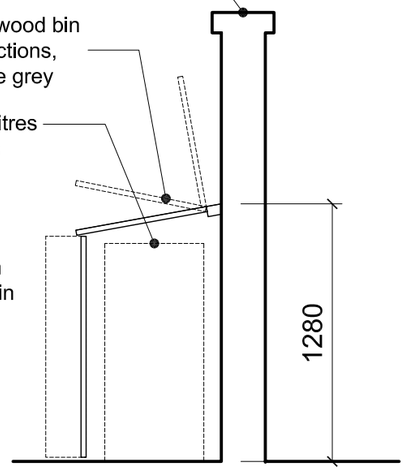

6 Proposed section

Proposed 180L Wheelie Bin

Size: 1066(height) x 550(depth) x 480(width)

GENERAL NOTES

All dimensions are in millimetres

REVISION

A	NOV 11	Add the dimensions to the bin store

Ko and Partners
Unit 6
1-3 Upper Richmond Road
London SW15 2RF
T 020 8874 0758
F 0870 762 3742
E postbox@koandpartners.co.uk

Project: 165 GRAY'S INN ROAD, LONDON WC1X 8UE

Proposed Bin Store

342-B-021

Date: AUG 11

Revision: A

Scale: 1:30@A3

Client: **Edenfield Estates Ltd**

FOR CONSTRUCTION