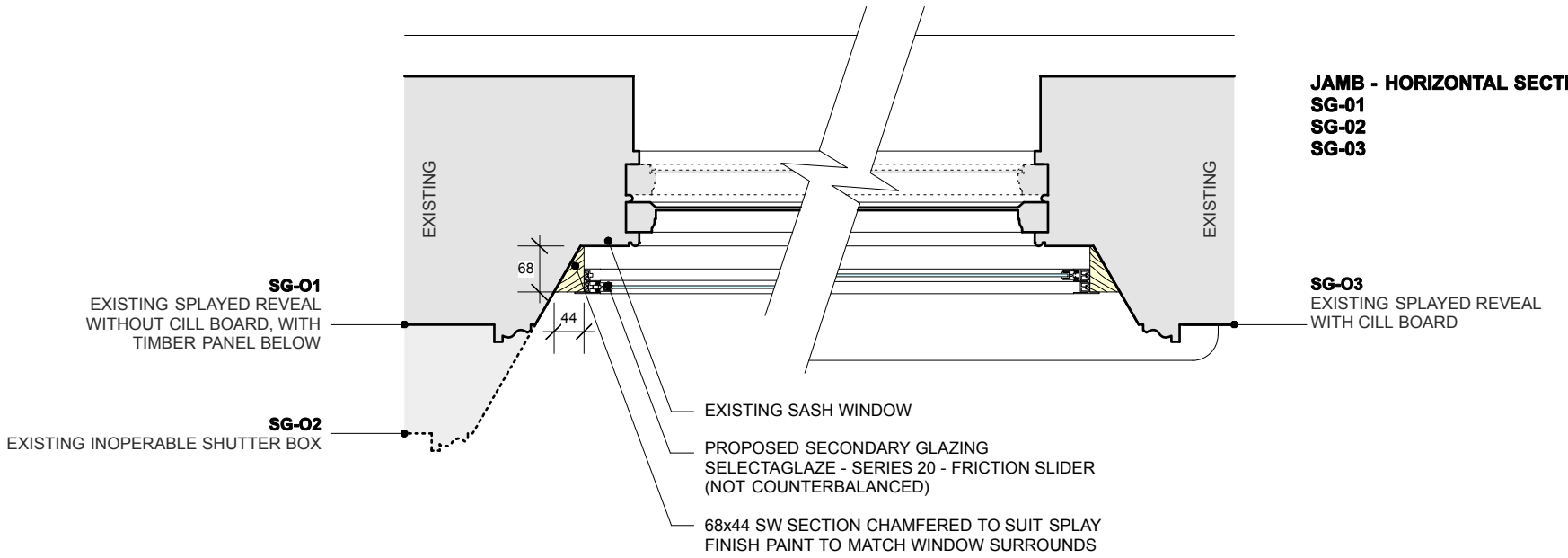

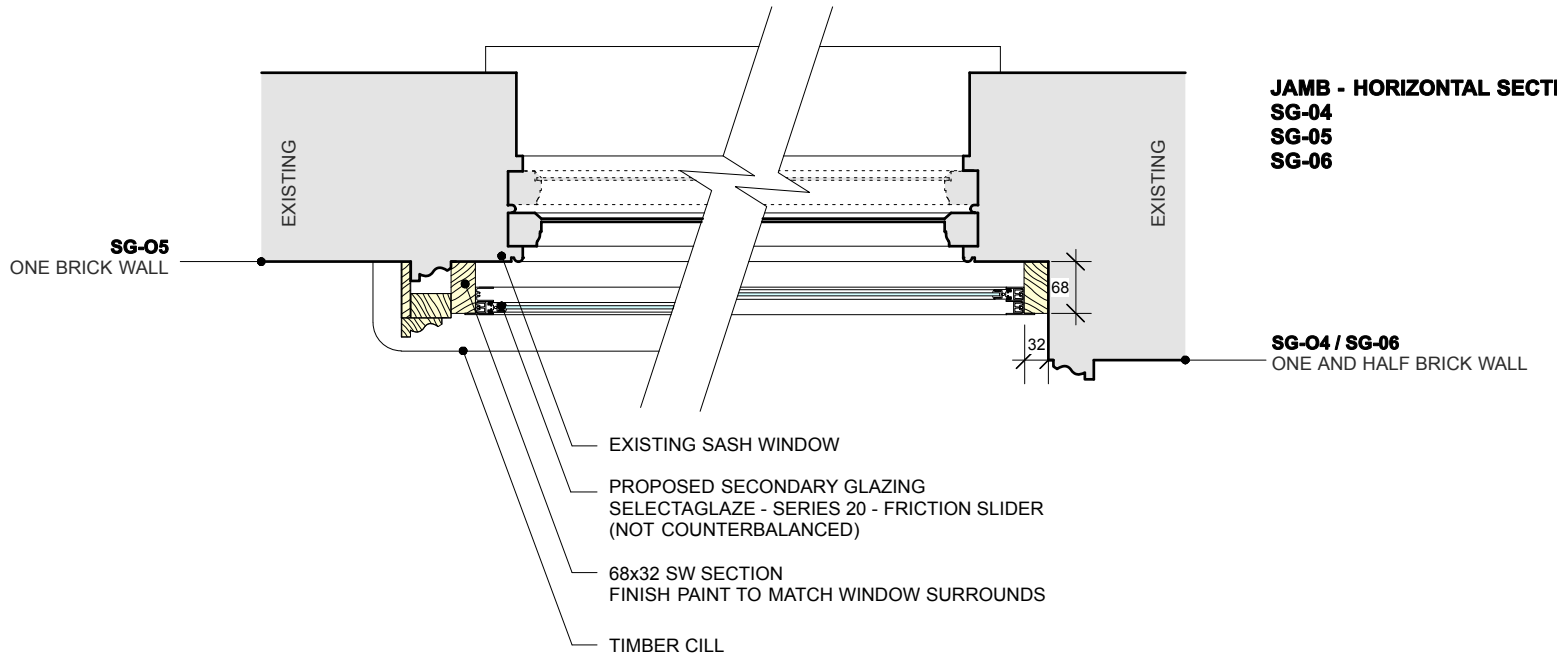

HEAD AND CILL
VERTICAL SECTION

SG-01 (SEE ABOVE)
SG-02
SG-06

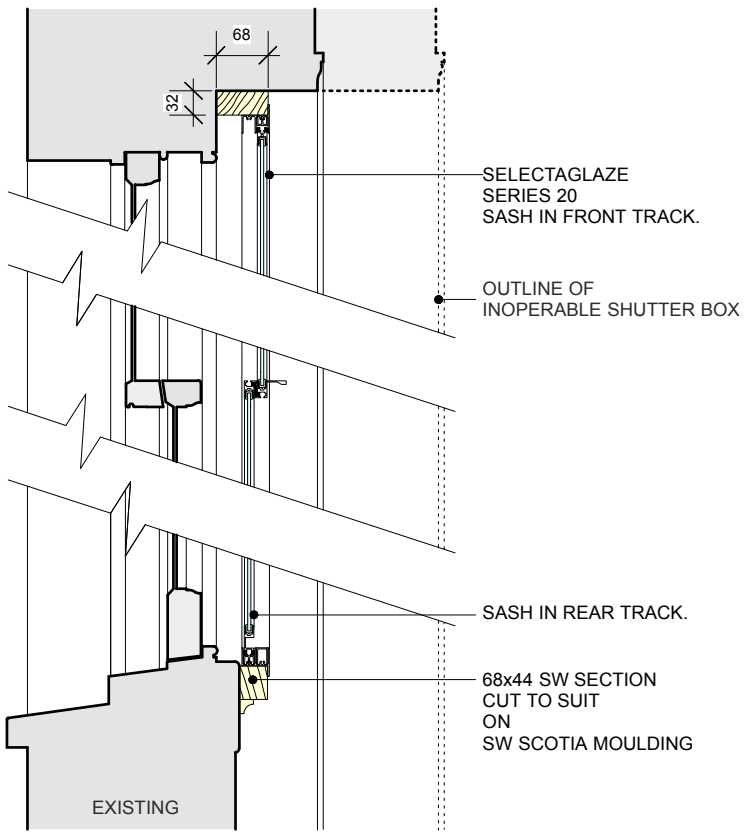

REVEAL WITHOUT CILL,
WITH TIMBER PANEL BELOW

HEAD AND CILL
VERTICAL SECTION

SG-03 (SEE ABOVE)
SG-04

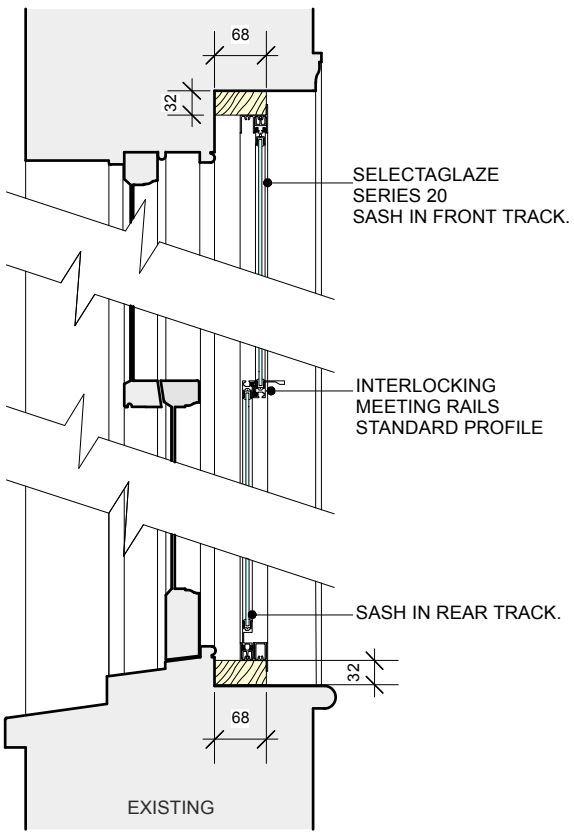

REVEAL WITH CILL BOARD

HEAD AND CILL
VERTICAL SECTION

SG-05 (SEE ABOVE)

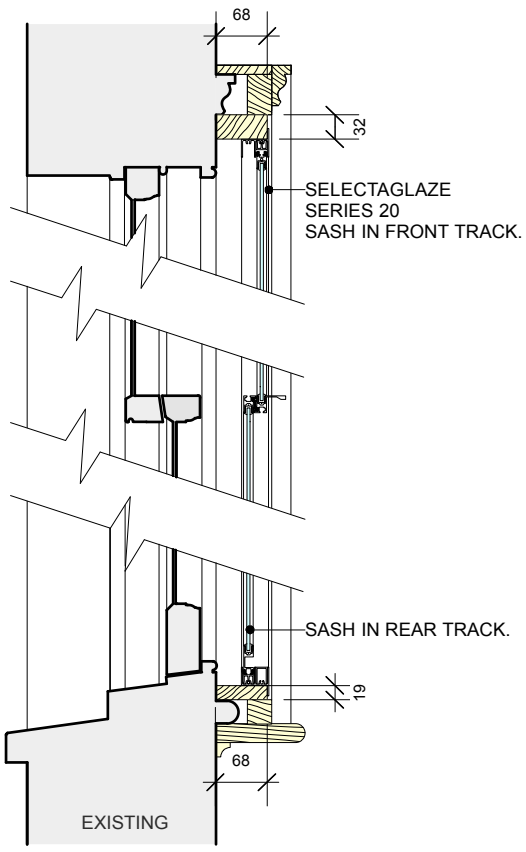

ONE BRICK WALL
NO REVEAL

Rev.B (14/11/13) - SG-01 ARCHITRAVE DETAIL TEXT EDITED

project5 ARCHITECTURE

PROJECT 5
ARCHITECTURE LLP
8 Waterson Street
London E2 8HL

T: +44 (0)20 7739 9131
F: +44 (0)20 7739 3687
E: info@p5a.co.uk

job title	scale	drawn	drawing no.
FREDERICK STREET PORTFOLIO	1:10 @ A3	FZ	6214-FAC-D01B
drawing: PROPOSED SECONDARY GLAZING	date: JUNE 2012	checked: PS	