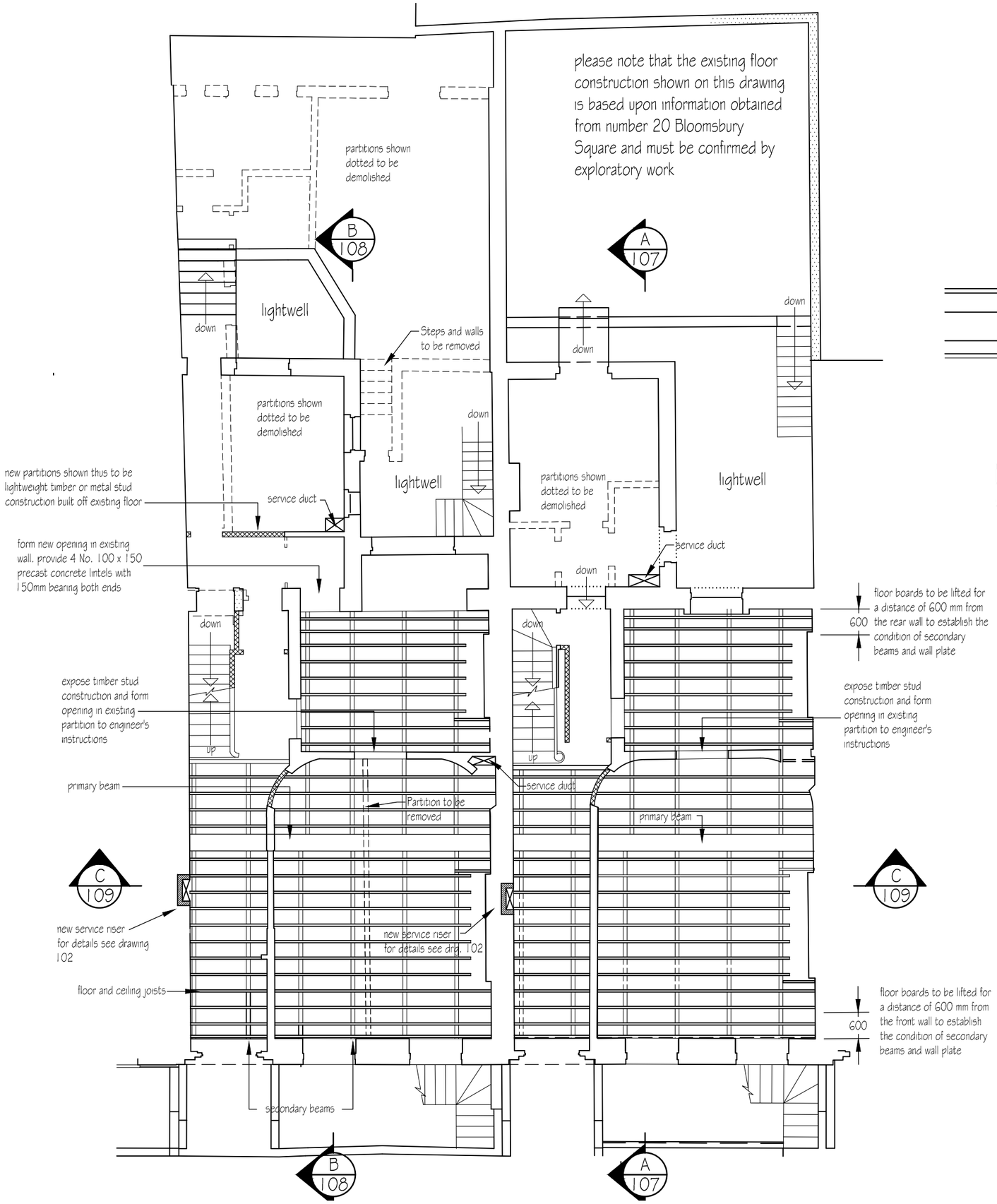

NOTES

1. This drawing to be read in conjunction with all relevant Architects, Engineers and specialists drawings, details and specifications.
2. Do not scale from this drawing
3. All dimensions in millimeters
4. Scale 1:100 unless noted otherwise

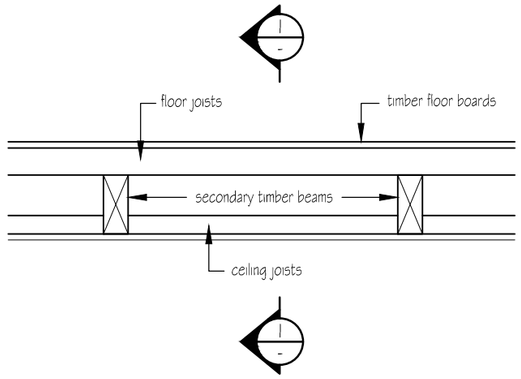

Detail of floor construction

Scale 1 - 25 @ A3

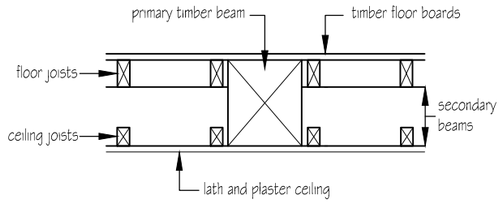

Section 1

Scale 1 - 25 @ A3

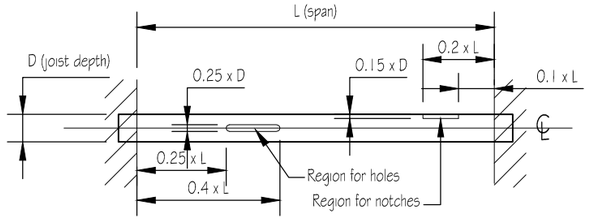

Joist Drilling and Notching Detail

Scale 1 - 50 @ A3

Rev	Date	
F	21 - 01 - 14	service ducts re-located to suit latest M & E layouts

R W A London
Civil & Structural Engineers

telephone : 020 7593 0088
e-mail : engineers@rwalondon.co.uk

Issued for TENDER

24 / 25 Bloomsbury Square

Ground floor plan - proposed

3198 **101** F