COPYRIGHT AND LIABILITY NOTES:

The design and drawings remain the property of Peek Architecture + Design. The client for this project will be licensed to use this design and documents on this site only upon full payment of architectural fees. This license is non-transferable.The design and drawings shall not be reproduced, up-loaded to the internet or traced without the permission of Peek Architecture + Design.

This drawing has been prepared from a survey drawing from Peek Architecture and Design Ltd commisioned by the client. It is VERY IMPORTANT that all dimensions are checked carefully before any work commences or any materials are ordered. If any discrepencies are noticed between this drawing and any other contract document then please contact Peek Architecture + Design immediately.

DO NOT SCALE USE FIGURED DIMENSIONS ONLY
All dimensions to be verified on site prior to the commencement of any work or the production of any shop drawing.

This drawing to be read in conjunction with all related Architect's and Engineer's drawings and any other relevant information.

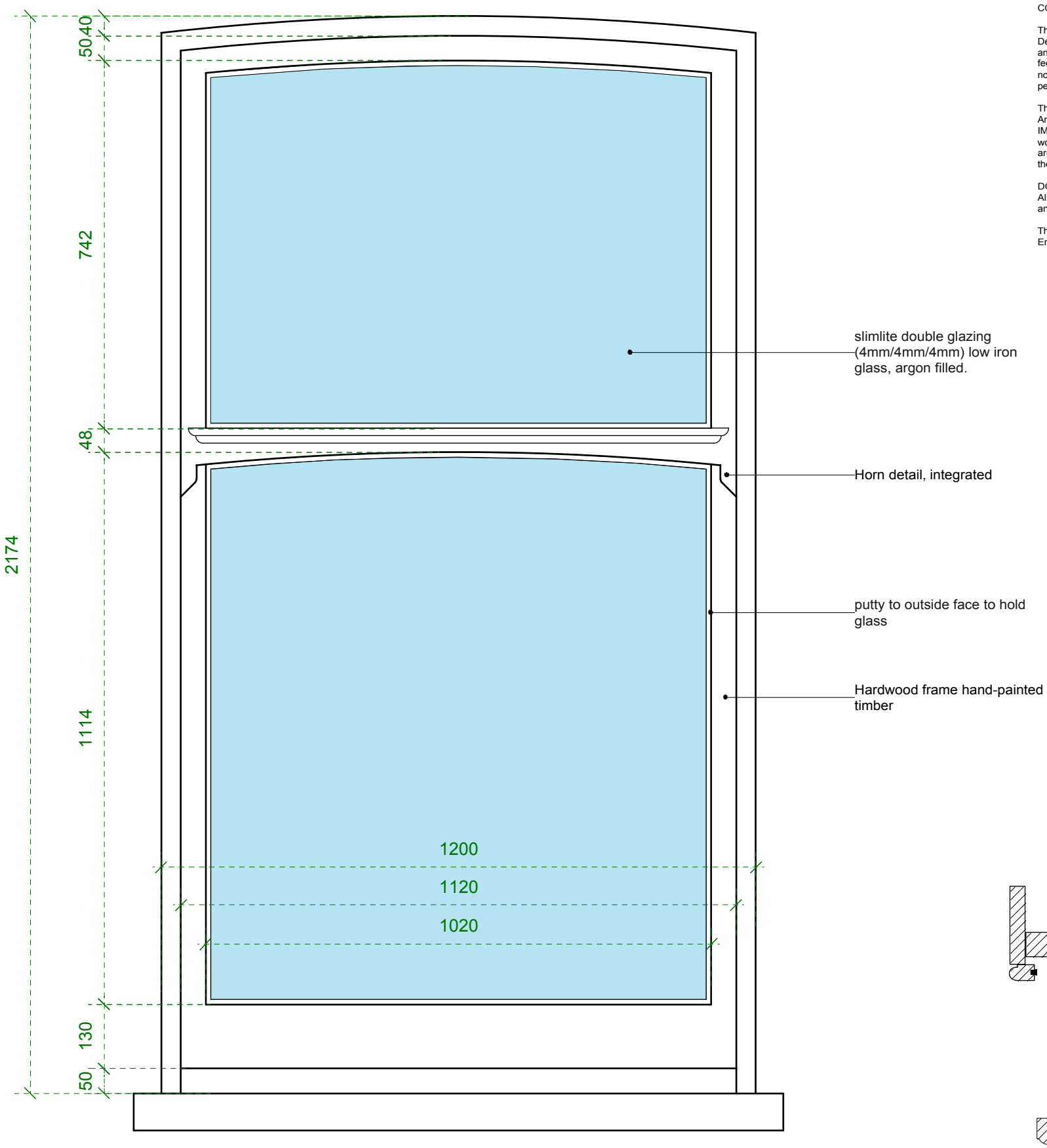

NEW SASH WINDOW - ELEVATION
scale 1:10 @A3

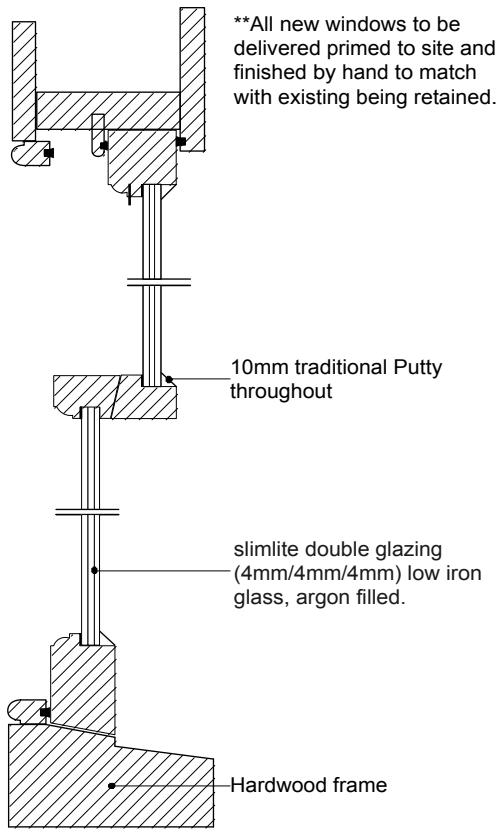

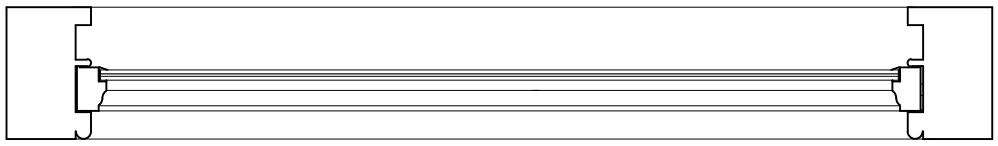

TYPICAL NEW SASH WINDOW PLAN
scale 1:10 @A3

SASH WINDOW SECTION
scale 1:5 @A3

DATE:	REVISION:	REVISION COMMENTS:	AUTHOR:	CHECKED:
	-	First Issue	DM	NN

51 GREENCROFT GARDENS,NW6 3LL

DRAWING NAME:
PROPOSED FRONT TYPICAL SASH WINDOW DETAIL

PROJECT NO:	DRAWING NO:	REVISION:	SCALE @ SIZE:
P10793	DET401	A	1:5 @ A3 1:10 @ A3
START DATE:	FIRST AUTHOR:		
JAN 25	DM		

1.5 @ A3 0 50 100 150 MM

1.10 @ A3 0 100 200 300 MM

PEEK | Architecture + Design Ltd
Address: 12-13 Poland Street, London, W1F 8QB
Web:www.peekarchitecture.co.uk | Email:georgina@peekarchitecture.co.uk | Tel:0207 734 3094