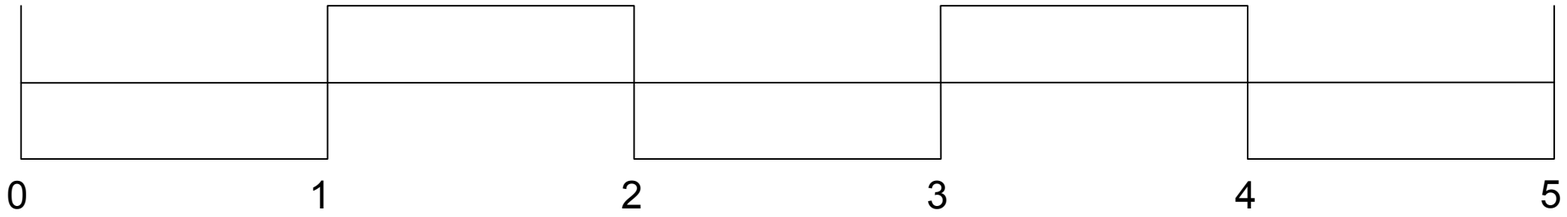

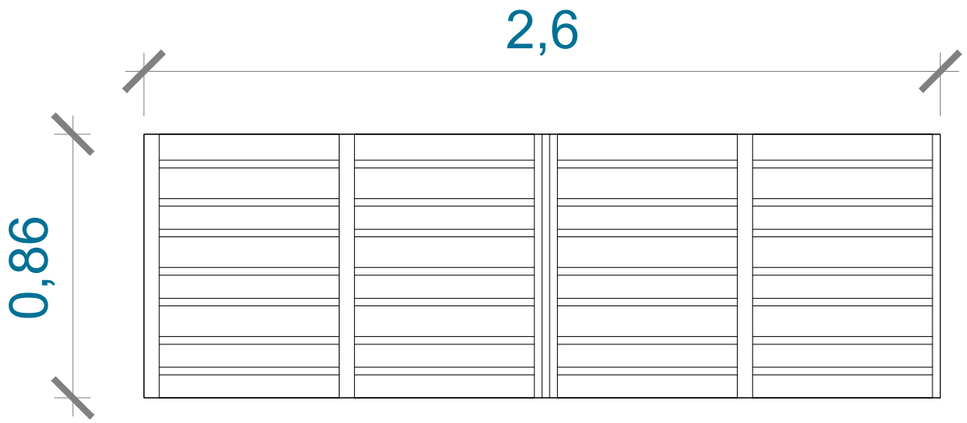

Top Veiw

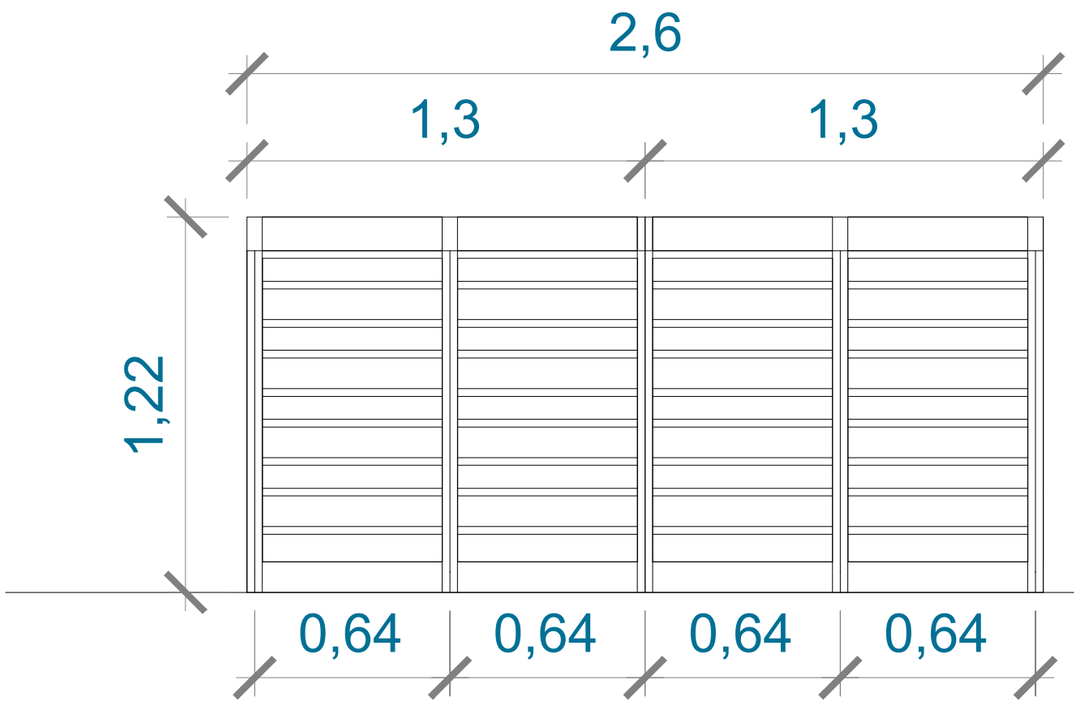

Front Veiw

Note:Only Timber to be used
to buiuld the bin storage
(see the illustation example image below)

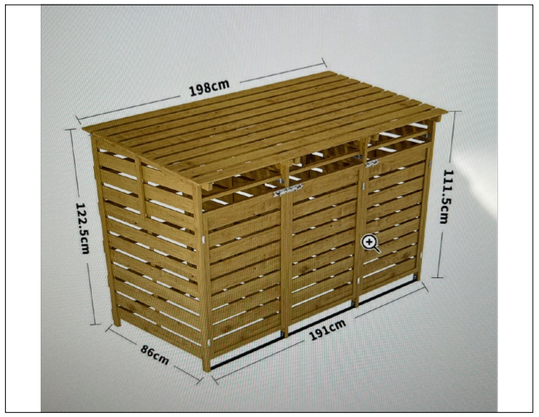

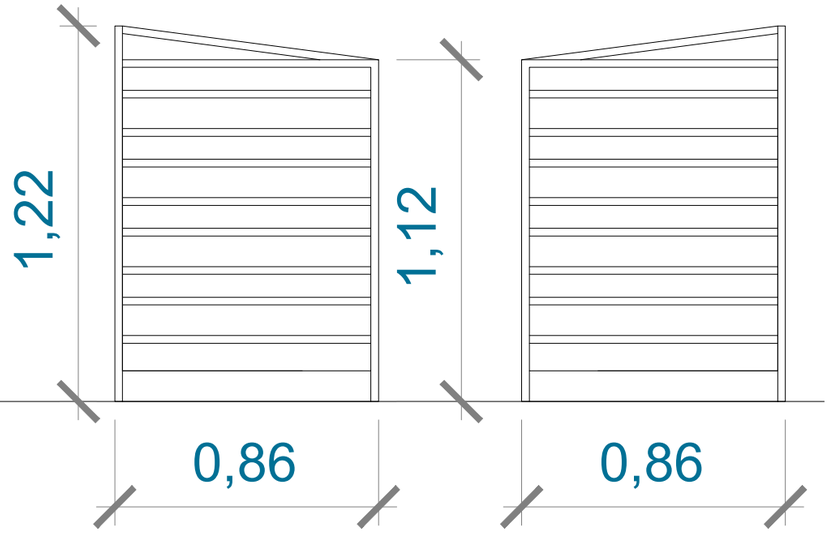

Side Veiws

General Notes:

1. Scale-bar to understand the dimensions of the drawing
2. All dimensions are in millimetres unless otherwise stated.
3. Drawing based on survey information by others.
4. Contractors are not to scale dimensions from this drawing
5. Contractors are to check all dimensions prior to commencement on site and notify the architect of any errors, omissions, or discrepancies
6. Arch Lucid Limited retain copyright of this drawing. It may not be copied, altered or reproduced in any way without their written authority.

Arch Lucid LTD
Architectural Services

Contact: 0203420027
Email: info@archlucid.com

Rev	Description	Date

CODE	SUITABILITY DESCRIPTION
STATUS	PURPOSE OF ISSUE

ADDRESS
19 Skardu Road, NW2 3ES, UK

PROJECT
Conversion single dwelling into two flats

TITLE
Proposed Bin Store

CLIENT
Stuart Parkinson

DRAWN BY	CHECKED BY	DATE
		13/01/25

SCALE (@ A3)	PROJECT NUMBER
1:20	AL24/19SR

DRAWING NUMBER	REV
AL24/19SR/11	00