KEY

Existing features - to be retained

1. Existing skirting boards to be refurbished and where possible retained and/or replaced with like for like; to be painted.
5. Existing wall finishes to be painted and/or receive decorative finish.

Existing features - to be removed

11. Radiators on the basement, second and third floors (not original to the building), to be removed.
16. Third floor ceiling to be removed; roof trusses to be exposed where possible/feasible.

Proposed new

19. Proposed new timber door, to match/complement existing doors and external architrave- 6 panel; to be painted.

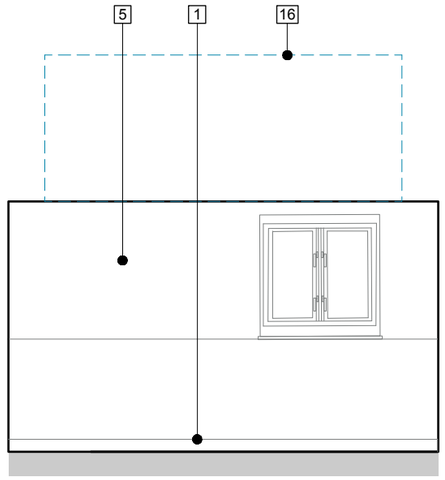

Internal Elevation 1
Scale 1:50

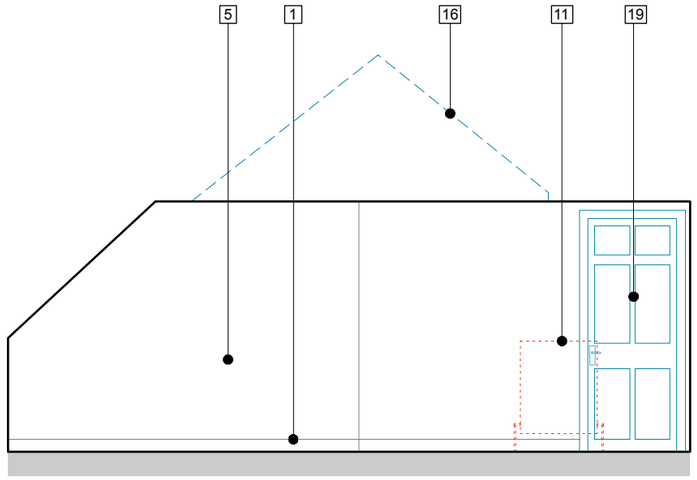

Internal Elevation 2
Scale 1:50

Key:

Proposed new items/interventions

Existing to be removed/demolished/ altered

Key Plan: Third Floor Plan Room 11

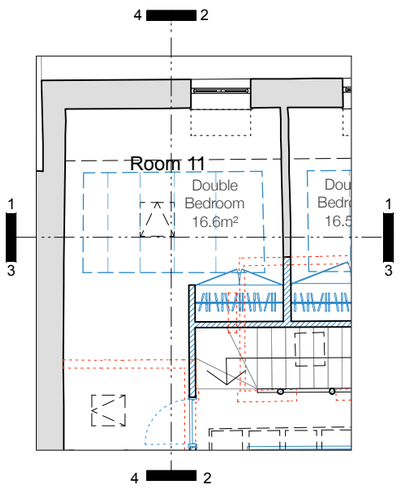

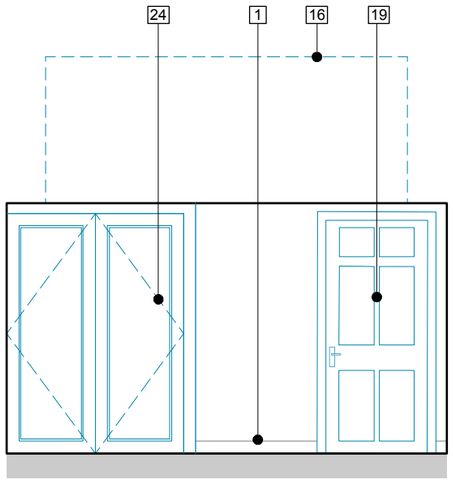

Internal Elevation 3
Scale 1:50

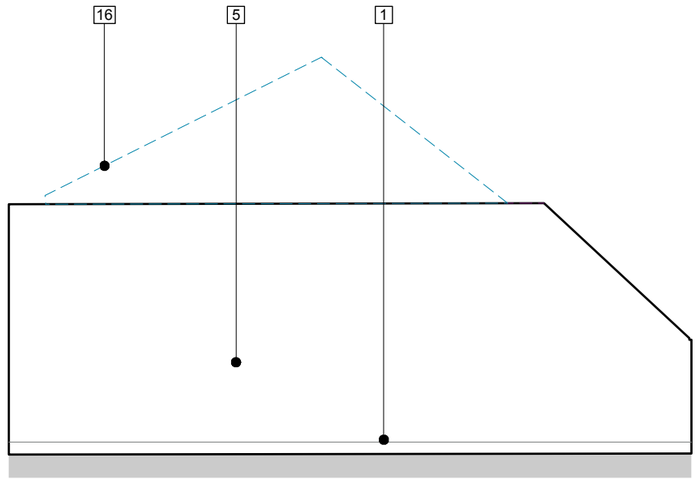

Internal Elevation 4
Scale 1:50

0 0.5 1 2.5 5m
Scale 1:50

Revision	Date	Notes
OR	15.02.2024	Preliminary set
A	05.04.2024	General Revision
B	17.04.2024	General notes / annotations revised
C	17.07.2024	General revision
D	12.09.2024	General revision
E	08.10.2024	General revision
F	05.11.2024	Draft stamp removed

Glas Architects
Mezzanine Offices
John Trundle Court
Barbican, London
EC2Y 8DJ

Tel +44 (0)20 7739 7969
Fax +44 (0)20 7613 1903
mail@glasarchitects.co.uk
www.glasarchitects.co.uk

All dimensions to be verified on site by the contractor and all discrepancies or omissions to be reported to the architect before proceeding with the work. Copyright © Glas Architects Ltd. Reproduction in any form without the express written consent of Glas Architects Ltd is prohibited.

Drawing No	344/LBC/10.12	Rev No	F
Date	February 2024	Drawn	JS
Status	Information	Drg Size	A3
		Checked	NS
		Scale	1:50

Client: B & K Investments Limited

Project Title: 7 John Street

Drawing Title: Proposed Internal Elevations - Room 11