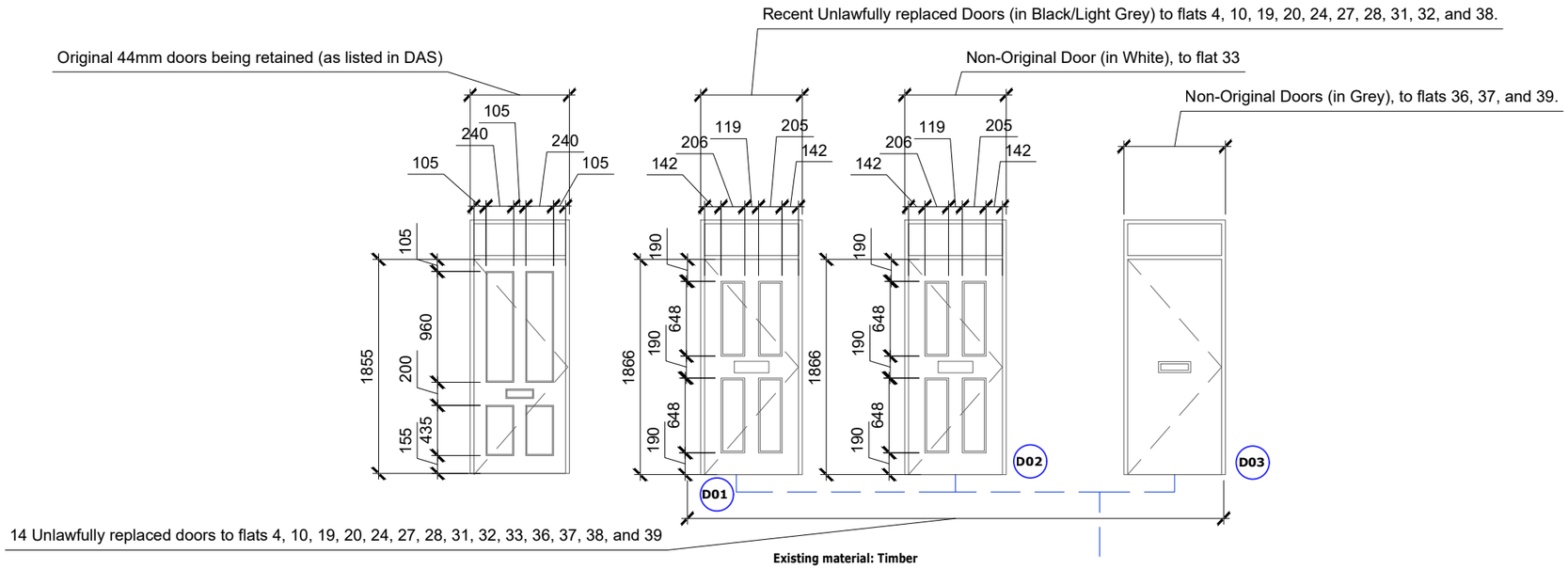

1 Door Schedule - Existing

Scale: 1:50 @ A3

Existing material: Timber
Glazing: None, Fanlight Single
All doors As shown on floor plans

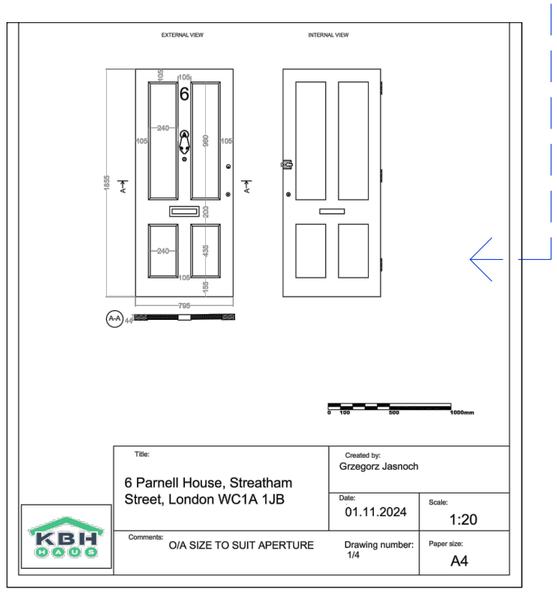

2 Door Schedule - Proposed

Scale: 1:50 @ A3

Scale Bar 1:50

0 0.5 1 2.5m

Rev	Description	By	Date
P3	Door type tweaks	AJ	04/11/2024
P2	Revised Application	AJ	17/10/2024
P1	Planning	AJ	30/05/2024

Client
KBH

Project Name
Parnell Doors LBC

Project Location
Parnell House, Streatham Street, London, WC1A 1JB

Sheet Name
Existing and Proposed Door Schedule

Project Status
Planning

Drawing Nr.
LBC001-ARJ-ZZ-ZZ-DR-B-PL401

Scale 1:50 @ A3

ARJ Surveying Services

© This drawing and any design hereon is the copyright of ARJ Surveying Services and must not be reproduced without their written consent. All drawings remain the property of ARJ Surveying Services. Figured dimension only to be taken from this drawing. All dimensions to be checked on site. Please inform ARJ Surveying Services immediately of any discrepancies before work proceeds.