Trees and Construction

BS5837:2012 Tree Survey, Arboricultural Impact Assessment & Method Statement

Site: 45 Elsworthy Road, NW3 3BS

Ref: 231829/A2_AIA_Rev.B

Client: Wolff Architects Ltd

(Mail) 2nd Floor | 1 Hunters Walk | Canal Street | Chester | CH1 4EB

0333 123 7080 | info@indigosurveys.co.uk

www.IndigoSurveys.co.uk

Arboricultural Consultant (Author):	Arboricultural Consultant (Checked by):
Tony Banner *TechCert (ArborA), TechArborA*	Andrew Turnbull *FDSc MArborA*

- October 2024 -

TABLE OF CONTENTS

Revision	**Description**	**Date**
/	Tree survey advice	02/11/2023
A	Proposed site update	17/07/2024
B	Revised scheme update	11/10/2024

(Mail) 2nd Floor | 1 Hunters Walk | Canal Street | Chester | CH1 4EB
e: info@indigosurveys.co.uk | t: 0333 123 7080

1. INTRODUCTION

1.1 **Instruction:** This advice has been prepared for Wolff Architects Ltd (hereafter; client) and is in respect of the tree related planning considerations at 45 Elsworthy Road, NW3 3BS (hereafter; site).

As the proposal relates to development works at site, the advice herein is produced in accordance with the British Standard 5837 : 2012 '*Trees in Relation to Design, Demolition and Construction - Recommendations'* (hereafter; BS5837).

1.2 **BS5837:** The scope of BS5837 is to provide guidance on how trees and other vegetation can be integrated into construction and development design schemes. The overall aim is to ensure the protection of amenity by trees which are appropriate for retention.

1.3 **Scope of this advice:** This advice has been produced in accordance with BS5837 and is intended to demonstrate the site's realistic arboricultural constraints and assist with the design process. The objective is to systematically assess the site and provide suitable recommendations regarding the proposal's potential impact on trees and vice versa.

1.4 Following instruction the consultant surveyed the site on the 24th October 2023 where a site walkover and BS5837 tree survey were carried out; all trees on site and around the application boundary were surveyed from ground level and plotted as either an individual or a tree group.

1.5 This advice is subject to caveat at Appendix I, outlines relevant terms and definitions at Appendix II and constitutes the findings of the preliminary site assessment and associated arboricultural recommendations.

1.6 The survey data and site observations use the supplied topographical survey to illustrate the surveyed trees in plan format as a 'Tree Constraints Plan' (hereafter; TCP).

The TCP was supplied with arboricultural advice and has an overlay of the proposed scheme to enable review. The TCP informs this assessment and is used as a base layer for the appended 'Tree Protection Plan' (hereafter; TPP); the TCP, tree survey data table and TPP are at Appendix III.

(Mail) 2nd Floor | 1 Hunters Walk | Canal Street | Chester | CH1 4EB
e: info@indigosurveys.co.uk | t: 0333 123 7080

2. SITE INFORMATION & TREE ASSESSMENT

2.1 The site currently comprises a detached residential property with gardens front and rear accessed directly off Elsworthy Road.

2.2 **Proposal:** It is understood a proposed scheme involves the construction of a basement to the existing property. This is confirmed as per the client's proposed site plan as illustrated on the TCP.

2.3 The site requires consideration from an arboricultural perspective due to the presence of trees on and around the site; these trees are deemed to be within impacting distance of the potential construction area.

2.4 <u>The trees</u> -

2.4.1 The tree survey and assessment resulted in the BS5837 quality/retention categories of 'A - high', 'B - moderate' and 'C - low' being attributed to trees/tree groups as well as those categorised as 'U' for those trees of curtailed life expectancy.

2.4.2 The BS5837 tree survey is a means of objective assessment and reflects the trees' condition, quality contribution, remaining life expectancy and spatial considerations (stem, crown and roots). On this basis and in order to consider the trees' accurate constraints, the survey data has the crown extents for north, east, south and west, the stem diameter measurement, and the calculated root protection areas (hereafter; RPAs). Hereafter, the trees are therefore reviewed and considered on their own merits and in line with the guidance of BS5837.

(Mail) 2nd Floor | 1 Hunters Walk | Canal Street | Chester | CH1 4EB
e: info@indigosurveys.co.uk | t: 0333 123 7080

3. FINDINGS & RECOMMENDATIONS

3.1 The following information, as with the prior contents of this report, should be read with the appended tree data table and tree constraints plan (221415/TCP/01).

NOTE: This information as s.3 for the '*tree survey assessment*' is included as an objective and general overview of the trees and consideration for retention and protection. It is included herein for reference and context and is supplemented with a review of the scheme as the AIA (section 4) and the AMS 'considerations' (section 5).

3.2 General Considerations for Tree Retention / Removal

3.2.1 Due to the poor condition and defects noted to the trees categorised as 'U'. This tree can be removed for arboricultural reasons (see tree survey data table).

3.2.2 There are smaller scale trees and those with defects or limitations on the current amenity contribution or useful remaining life expectancy, these are categorised as 'C - low'.

These 'C' category trees should not constrain nor significantly guide a scheme, although protection may be preferable to retain landscape function and maturity. For any proposed tree removals, mitigation tree planting is recommended as part of a landscape scheme and can suitably replace and enhance the initial loss of canopy cover.

3.2.3 The moderate quality 'B' category trees are noted as such due to their fair future potential and good current amenity contribution. These should be retained and protected where possible as part of the site's development.

3.2.4 The more notable trees, based on the individual prominence, lack of significant defects, current contribution and/or future potential, are categorised as 'A - high'. It is recommended that these trees be retained, protected and be clear of the proposal. This is best achieved by avoidance where their crowns and RPAs are accommodated in the design and layout.

3.3 Further to the above information, the proposed scheme (see; TCP) is reviewed hereafter at s.4 as an Arboricultural Impact Assessment (hereafter; AIA).

(Mail) 2nd Floor | 1 Hunters Walk | Canal Street | Chester | CH1 4EB
e: info@indigosurveys.co.uk | t: 0333 123 7080

4. SCHEME / IMPACT ASSESSMENT

4.1 For the purpose of this assessment, the proposed site plan is used as a basis for consideration. This takes account of anticipated tree removals, tree protection options and potential alterations to account for arboricultural features; as per s.1.6 and s.2.2 herein, the TCP shows the '*proposed site plan'* as an overlay for review.

4.2 To facilitate the scheme the 'C' category trees T6 and T7 need to be removed. However, as per s.3.2.2, these trees are low quality and should not significantly constrain nor guide the scheme. Therefore, said trees should be removed to facilitate the scheme and mitigated by new tree planting as part of a landscape scheme is recommended; a 1:1 removal to replacement ratio as mitigation is recommended for 'C' category trees.

4.3 The proposed basement encroaches the RPA of the T3. This will require sensitive manual excavations to a depth 750mm and careful root pruning prior to pilling to minimise the RPA impact.

4.4 In order to facilitate construction access, the crowns of G2 and T3 will need to be pruned to provide suitable construction clearance i.e. 2m crown clearance to the proposed footprint.

4.5 Following the above considerations for trees, the trees are clear of the active construction area. However, the installation of temporary tree protection will be required to ensure no impact on trees from access, vehicles, material storage etc.

4.6 Further to the above, the following tree works are required prior to site works.

TREE WORK SUMMARY

NUMBER	TREE REMOVALS / PRUNING WORKS	
G2 and T3	Prune	Lateral branch reduction back towards stem boundary to provide 2m crown clearance to the proposed scheme.
T6 and T7	Remove	Remove in order to facilitate and in conjunction the scheme: - to be replaced with new site landscaping.
Retained trees		Protection by placement of fixed Heras panels around the crown/RPA extents, to have no access during construction.

(Mail) 2nd Floor | 1 Hunters Walk | Canal Street | Chester | CH1 4EB
e: info@indigosurveys.co.uk | t: 0333 123 7080

4.7 Further to the above review and in consideration for the tree removals and need to protect retained trees, the following section contains said details as an Arboricultural Method Statement (Application Stage).

(Mail) 2nd Floor | 1 Hunters Walk | Canal Street | Chester | CH1 4EB
e: info@indigosurveys.co.uk | t: 0333 123 7080

5. METHOD STATEMENT (Application Stage)

5.1 Arboricultural Construction Restrictions

5.1.1 The following restrictions are considered relevant for tree protection purposes which are illustrated on the appended Tree Protection Plan:

a) Tree works; are to be completed prior to any and all site works: additional tree works (or leaning against or attaching of objects to a tree) are not permitted unless agreed in writing by the council.

b) Protective Barrier Fencing (hereafter; PBF); is to be installed around the retained trees immediately after the tree works and prior to the site works commencing.

c) Construction Exclusion Zone (hereafter; CEZ); following the installation of PBF the fenced off section is to act as a CEZ and be supplemented with ground protection for RPA sections outside of fenced off areas as the CEZ.

d) Material Handling; no chemicals/materials are to be transported/stored/used/mixed within exposed grounds on site; all chemical / cement storage, transport or use will be pre-prepared with impermeable liner and detail within a Construction Management Plan.

e) Site Management; no fires are to be lit and no machinery, plant or vehicles are to be washed down within 10m of a tree's canopy, within a RPA / CEZ, and the RPA/CEZ may not be breached, i.e. no mechanical digging or scraping is permitted within a RPA/CEZ.

f) Sensitive Landscape; only following construction completion can the PBF be removed and any remaining soft landscape works be undertaken (ground levels to be retained within RPAs and works undertaken manually with non-mechanical hand tools).

5.2 Arboricultural Site Monitoring / Supervision

5.2.1 The site should be checked by a qualified arboriculturist throughout the construction processes to ensure the tree protection measures are adhered to, thus -

(a) pre-commencement to confirm tree removals and inspect PBF installation and site set-up;

(b) during foundation excavations within RPAs;

(c) after main construction to ensure adherence to this AMS and to discuss tree protection measures for landscape stage; and

(d) after construction completion to sign off the site for correct tree protection and planting.

(Mail) 2nd Floor | 1 Hunters Walk | Canal Street | Chester | CH1 4EB
e: info@indigosurveys.co.uk | t: 0333 123 7080

5.3 Protective Barrier Fencing (PBF) Specification

5.3.1 Barrier fencing is to be installed (and signed off by way of arboricultural supervision) following the completion of the tree works. It is illustrated on the Tree Protection Plan and is to remain in situ for the entire duration of preparation/construction processes unless otherwise agreed in writing by the council.

5.3.2 The barrier fencing is to consist of a series of Heras panels secured in place by driven scaffold posts or a scaffold frame to ensure that the fencing lines are well braced to resist impact, and site hoarding around the application boundary to prevent access to the RPA/CEZ areas around the approved works.

5.4 Underground utilities

5.4.1 Underground utilities are to be installed as per a dedicated plan and be clear of RPA by design. Otherwise, and if RPAs cannot be avoided, the following restrictions are recommended for underground utilities within RPAs:

- Any necessary excavations to be undertaken sensitively using either a no-dig method (e.g. Air-Spade) and/or under arboricultural supervision;
- Any exposed roots shall be packed with a clean damp sand (not builders sand) and wrapped in hessian sacking to protect them;
- Small roots which are identified (those less than 25mm diameter) may be carefully pruned back with a clean sharp tree saw; and
- Larger roots which are identified (those greater than 25mm in diameter) are to be retained and protected as they may be necessary for a tree's health and stability.

5.5 Sensitive Ground Works within RPAs

5.5.1 The basement foundations are within the RPA of T3 and will require sensitive excavations to minimise RPA impact.

5.5.2 Any excavations within a RPA must:

- Be undertaken under arboricultural supervision; and
- Use sensitive excavation techniques to protect the tree roots and their existing growing conditions i.e., manual excavations to a depth of 750mm to allow roots to be carefully pruned back to clear the proposed contiguous pile.

5.6 Landscape Detail

5.6.1 The finer details of the site landscaping proposals are to be illustrated on a landscape plan. This is to include the exact proposals for hard and soft landscaping together with the details for any new trees' planting locations, species and stock selection, installation

(Mail) 2nd Floor | 1 Hunters Walk | Canal Street | Chester | CH1 4EB
e: info@indigosurveys.co.uk | t: 0333 123 7080

and maintenance; this is to be undertaken by the appointed landscape architect who will have the full support of the arboricultural consultant where required.

5.7 Report Handling

5.7.1 This report is released to the client and architect to be distributed at their discretion and the consultant is available for queries relating to this report and/or trees.

5.7.2 The proposed scheme is reviewed in respect of the arboricultural constraints and is considered to be achievable in line with the BS5837 guidance. The recommendations herein may be approved by the council as a means of authorised tree works and tree protection, for which the planning approval will be subject to a final and detailed Arboricultural Method Statement based on the approved information and other detail perhaps not available at the pre-planning approval stage, i.e. utility layout, final landscape plan, construction management plan (CMP) etc.

5.7.3 This AMS and the TPP may be approved by the council in support of the application, subject to a conditioned final AMS and TPP as a means of authorised tree protection measures; all site personnel will have access to a copy and the tree work and protection details are to be inspected as per s.5.2 for *'Arboricultural Monitoring / Supervision'*.

This concludes our advice.

(Mail) 2nd Floor | 1 Hunters Walk | Canal Street | Chester | CH1 4EB
e: info@indigosurveys.co.uk | t: 0333 123 7080

Caveat

Any and all information supplied to Indigo Surveys Ltd by/on behalf of the client is assumed to be accurate unless otherwise informed. | This advice is limited to the observations made on the date of inspection as detailed herein and any deletion, editing or alteration will result in the advice being null and void in its entirety. | This advice in its entirety may be deemed null and void if remedial works are undertaken on any area of the site, on or after the date of the survey. | No liability is assumed by the author or by Indigo Surveys Ltd for any misuse, misinterpretation or misrepresentation of this advice. | This advice is not valid in adverse or unpredictable weather conditions or for any failure due to 'force majeure' or unpredictable events. | No responsibility is assumed either by the author of this advice or by Indigo Surveys Ltd for any legal matters that may arise as a consequence. | Neither the author nor Indigo Surveys Ltd will be required to attend court or give testimony as part of this agreement. | The responsibility for any works undertaken on the basis of the recommendations of this advice does not form part of this agreement.

(Mail) 2nd Floor | 1 Hunters Walk | Canal Street | Chester | CH1 4EB
e: info@indigosurveys.co.uk | t: 0333 123 7080

Appendix II

Terms and Definitions

"Arboriculturist" - person who has, through relevant education, training and experience, gained expertise in the field of trees in relation to construction.

"Competent Person" - person who has training and experience relevant to the matter being addressed and an understanding of the requirements of the particular task being approached.

"Topographical survey" - an accurately measured land survey undertaken to show all relevant existing site features. *A method of carrying out topographical surveys is given in RICS specification* Surveys of land buildings and utility services at scales of 1:500 and larger.

"BS5837 Tree survey" - should be undertaken by an arboriculturist to record information about the trees on or adjacent to a site. The results of the tree survey, including material constraints arising from existing trees that merit retention, should be used (along with any other relevant baseline data) to inform feasibility studies and design options. For this reason, the tree survey should be completed and made available to designers prior to and/or independently of any specific proposals for development.

"Tree categorisation method" - trees should be categorised in accordance with the BS5837 cascade chart by an arboriculturist. This is to identify the quality and value (in a non-fiscal sense) of the existing tree stock, allowing informed decisions to be made concerning which trees should be removed or retained in the event of development occurring.

"Root protection area (RPA)" - layout design tool indicating the minimum area around a tree deemed to contain sufficient roots and rooting volume to maintain the tree's viability, and where the protection of the roots and soil structure is treated as a priority, shown as an arboricultural constraint in m^2. The radius is calculated using the BS5837 calculation method. An arboriculturist may change the shape of an RPA but not reduce its area.

"Arboricultural implications assessment" - a study, undertaken by an arboriculturist, to identify, evaluate and possibly mitigate the extent of direct and indirect impacts on existing trees that may arise as a result of the implementation of any site layout proposal.

"Arboricultural method statement" - methodology for the implementation of any aspect of development that is within the root protection area, or has the potential to result in loss of or damage to a tree to be retained.

"Tree protection plan" - a scale drawing, informed by descriptive text where necessary, based upon the finalised proposals, showing trees for retention and illustrating the tree and landscape protection measures.

(Mail) 2nd Floor | 1 Hunters Walk | Canal Street | Chester | CH1 4EB
e: info@indigosurveys.co.uk | t: 0333 123 7080

Appendix III

Data Table:	As appended (BS5837 Tree Survey Key & Table)
Tree Constraints Plan:	As appended (231829/TCP/01)
Tree Protection Plan:	As appended (231829/TPP/01)

(Mail) 2nd Floor | 1 Hunters Walk | Canal Street | Chester | CH1 4EB
e: info@indigosurveys.co.uk | t: 0333 123 7080

TREE SURVEY IN ACCORDANCE WITH BRITISH STANDARD 5837:2012 'TREES IN RELATION TO DESIGN, DEMOLITION & CONSTRUCTION - RECOMMENDATIONS'

CLIENT: ***PROJECT REF:*** 231829 /A1 ***SITE:*** 45 Elsworthy Road, NW3 3BS

CONTACT: / ***SURVEY DATE:*** 24 October 2023 ***ARB CONSULTANT:*** Andrew Turnbull *FDSc MArborA*

TREE REF. #	SPECIES	AGE	HEIGHT (in m)	CANOPY (in m) N - S - E - W	STEM (in mm)	RPA (in m)	CLEARANCE (in m)	1st BRANCH (in m)	VITALITY	LIFE EXPEC.	NOTES	BS CAT.	MANAGEMENT
T1	Ash; Fraxinus, Oleaceae	EM	12	5 - 3 - 4 - 4	300 *	3.6	4	3m - N.West	Normal	40 +	Offsite, no access, view over fence through shrubs.	B 2	
G1	Offsite tree growth	Y - M	5 - 20 +	/ - / - / - /	< 75 - 1000 *	/	2 +	/	Poor - Normal	40 +	Backdrop of London Plane 15m+ from site fence, sapling Sycamore, Ash and scrub, no access.	A 2	
T2	Sycamore; Acer, Aceraceae	SM	15	3 - 5 - 3 - 3	300 *	3.6	6 +	/	Fair	20 - 40	No access or stem view, dense climber in crown.	B 2	Management of climbers within crown recommended.
G2	4x Elder; Sambucus, Sapindaceae	M	8 - 10	< 3 all round	300 *	3.6	2 +	/	Fair / Poor	10 - 20	Multiple stem group, offsite, close to fence, scrubby, stem conflicts, deadwood, tarots, decay etc., indicative of age, no stem / base access or view.	C 2	
T3	Cotoneaster	M	10	5 - 3 - 5 - 5	400 *	4.8	1.5	2.5m - all round	Fair	10 - 20	Offsite, close to fence, canopy collective with G2, multiple stems at 2m+, no base view, scrubby form, deadwood and dieback to North.	C 2	
T4	Elder; Sambucus, Sapindaceae	LM	5	< 1.5 all round	260	3.1	N / A	/	Poor / Dead	< 10	3x stems (140mm, 1560mm, 160mm), no visible live growth, dense scrub and climber cover, multiple stems near base, multiple stem crown at 2m+.	U	
T5	Cherry; Prunus, Rosaceae	M	10	2 - 4 - 4 - 5	310	3.7	2	union	Fair	10 - 20	Climber covered stem to 3m, co-dominant at 1.5-2m, dominant growth West, heavy reduction East, 2.5m regrowth.	C 3	
T6	Apple; Malus, Rosaceae	M	12	2 - 6 - 3 - 6	340	4.1	2	union	Fair	10 - 20	Growth lean West, co-dominant at 2m, growth pushing fence, heavy pruning East and growth dominance West, reduced with 1-3m regrowth.	C 3	
T7	Magnolia, Magnoliaceae	M	8	< 3 all round	288	3.5	1	2m - all round	Fair	20 - 40	3x stems (120mm, 180mm, 190mm), small scale ornamental, reduced crown with 1-2m growth, multiple stems <0.5m.	C 1	
T8	Japanese Maple; Acer, Aceraceae	M	6	2.5 - 2.5 - 2.5 - 3	211	2.5	2 +	/	Fair	20 - 40	2x stems (110mm, 180mm), offsite, 1m lower than site level, co-dominant t 0.5m, multiple stem crown.	C 1	

TREE SURVEY 'KEY' - BRITISH STANDARD 5837:2012 'TREES IN RELATION TO DESIGN, DEMOLITION & CONSTRUCTION - RECOMMENDATIONS'

TPO/CA	-	On client request: presence of Tree Preservation Orders (TPO) / site location within a Conservation Area (CA) & date checked;
TREE REF. #	-	Tree reference number: tag or plan number (T - individual tree, G - group of trees/shrubs, H - hedge);
SPECIES	-	Genus, species and/or common name;
AGE	-	Age classification (NP - new planting, Y - young, EM - Early-Mature, SM - semi mature, M - mature, LM - late mature, OM - over mature);
HEIGHT (in m)	-	Approximate height of tree in metres;
CANOPY (in m) N - S - E - W	-	Approximate branch spread in metres of the four principal compass points;
STEM (in mm)	-	Stem diameter in millimetres: measured in accordance with s.4.6 of BS5837;
RPA (in m)	-	Circle radius of the Root Protection Area: calculated using the stem diameter (single/multiple stem variant, as outlined within BS5837);
CLEARANCE (in m)	-	Crown clearance in metres above the adjacent ground level;
IST BRANCH (in m)	-	Clearance in metres to first significant branch and direction of growth (where relevant);
VITALITY	-	Physiological condition typically gauged from canopy cover and annual extension growth (good, fair, poor, dead);
ESTIMATED REMAINING CONTRIBUTION	-	Approximate number of years a tree will continue to contribute without the need for oppressive arboricultural intervention, categorised in years as <10, 10-20, 20-40 and >40;
NOTES	-	Structural and physiological condition observations;
BS CAT.	-	BS5837 tree quality assessment category: resulting from structural/physiological condition and remaining contribution (approximate useful life expectancy);
	-	Standard retention category **U**: in such a condition that any existing value would be lost within 10 years;
	-	Standard retention category **A**: high quality and value, in such a condition as to be able to make substantial contribution of 40+ years;
	-	Standard retention category **B**: moderate quality and value, in such a condition as to make a significant contribution of 20+ years;
	-	Standard retention category **C**: low quality and value, currently in adequate condition to remain until new planting could be established 10+ years;
	-	Standard retention sub-category, mainly due to: **1**- Arboricultural values, **2**- Landscape values, **3**- Cultural values, including conservation;
MANAGEMENT	-	Preliminary management recommendations (as appropriate);
' * '	-	Within the survey schedule denotes an estimate

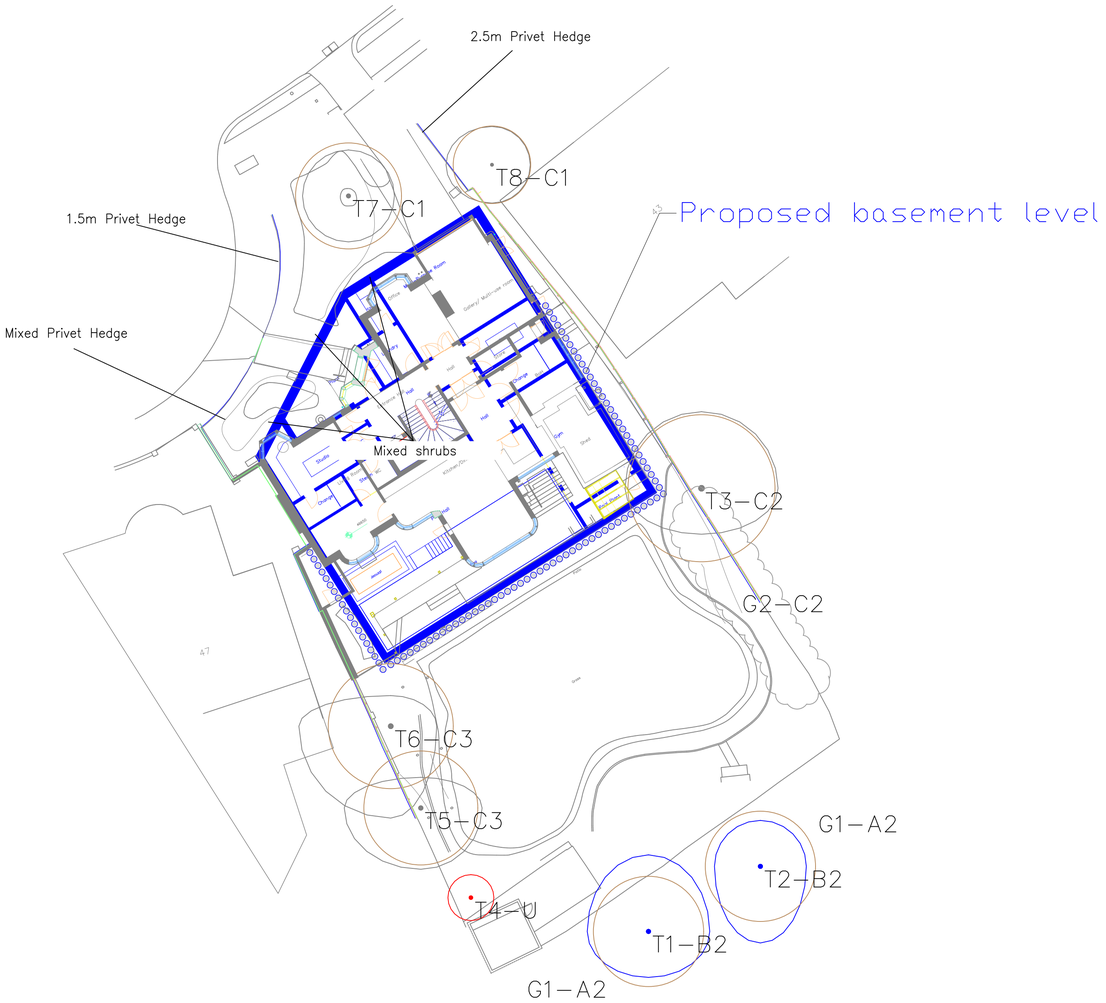

Root Protection Area (RPA) Notes

BS5837:2012 standard circular RPAs are illustrated here, with consideration required for anticipated root growth influence and restrictions, such as -

Root growth from trees generally may be absent restricted or deflected from site due to the lower/higher level changes, raised concrete structures, existing foundations, hard surfaces, longstanding compacted ground and existing structures for example. Further investigation may be required to establish the presence or absence of roots.

KEY

Tree Crown Spread

Root Protection Area (RPA)

Tree Stem

T1 Tree No.

Removed Tree

Tree Condition Category

A

B

C

U

The surveyed trees are illustrated on this Constraints Plan which is prepared in accordance with British Standard BS5837: 2012 'Trees in Relation to Design, Demolition and Construction – Recommendations'

Indicative

DO NOT SCALE FROM DRAWING

The original of this drawing was produced in colour – a monochrome copy should not be relied upon.

REV.	DESCRIPTION	DWN	CHK'D	DATE
A	Revised scheme overlay for review	TB	AT	10/10/24

CLIENT
Wolff Architects Ltd

PROJECT
231829/A1
45 Elsworthy Road, NW3 3BS

TITLE
Tree Constraints Plan

DWN	DATE	CHK'D	DATE	APP'D	DATE	SCALE
RPHB	02/11/2023	AT	02/11/2023			1–200

Indigo Surveys Ltd
(Mail) Second Floor, 1 Hunter's Walk, Canal Street, Chester, CH1 4EB
Telephone: 0333 123 7080 www.indigosurveys.co.uk

Drawing Number
231829/A1/TCP/01

A1

REV. A

Tree Protection Specification

The tree protection measures outlined within the Arboricultural Method Statement (ref: 231829/A2 AIA_AMS) are to be adhered to as illustrated on this Tree Protection Plan (ref: 231829_A2-TPP-01), and the additional details below, thus:

a) Tree works are to be completed prior to commencement of any and all site processes: no additional tree works (not specified in the method statement), or leaning against or attaching of objects to a tree, are permitted.

b) Protective Barrier Fencing (PBF), with Tree Protection Signs fixed at least every 5m (see detail and illustration on this TPP), is to be installed prior to the site works commencing.

c) Hard Surfaces within RPAs are to be retained where ongoing access is required and supplementary Ground protection is to be installed for exposed soft surfaced RPA sections for material drop-off and storage (needs to be load bearing and prevent chemical run-off or leaching into soils).

d) No chemicals or materials are to be transported or stored or used or mixed within a RPA or Construction Exclusion Zone (CEZ).

e) No fires are to be lit and no machinery, plant or vehicles are to be washed down within 10m of a tree's canopy or in a CEZ.

f) During site works RPAs and CEZs may not be breached, i.e. no surfacing works, without the prior advice of the consultant and the consent of the council.

g) No mechanical digging or scraping is permitted within a RPA or CEZ.

h) When all construction works are completed the PBF can be removed however, should be realigned consistent with the final landscape design to allow for the hard landscape improvement works to be undertaken ahead of the soft landscape shrub and tree planting works.

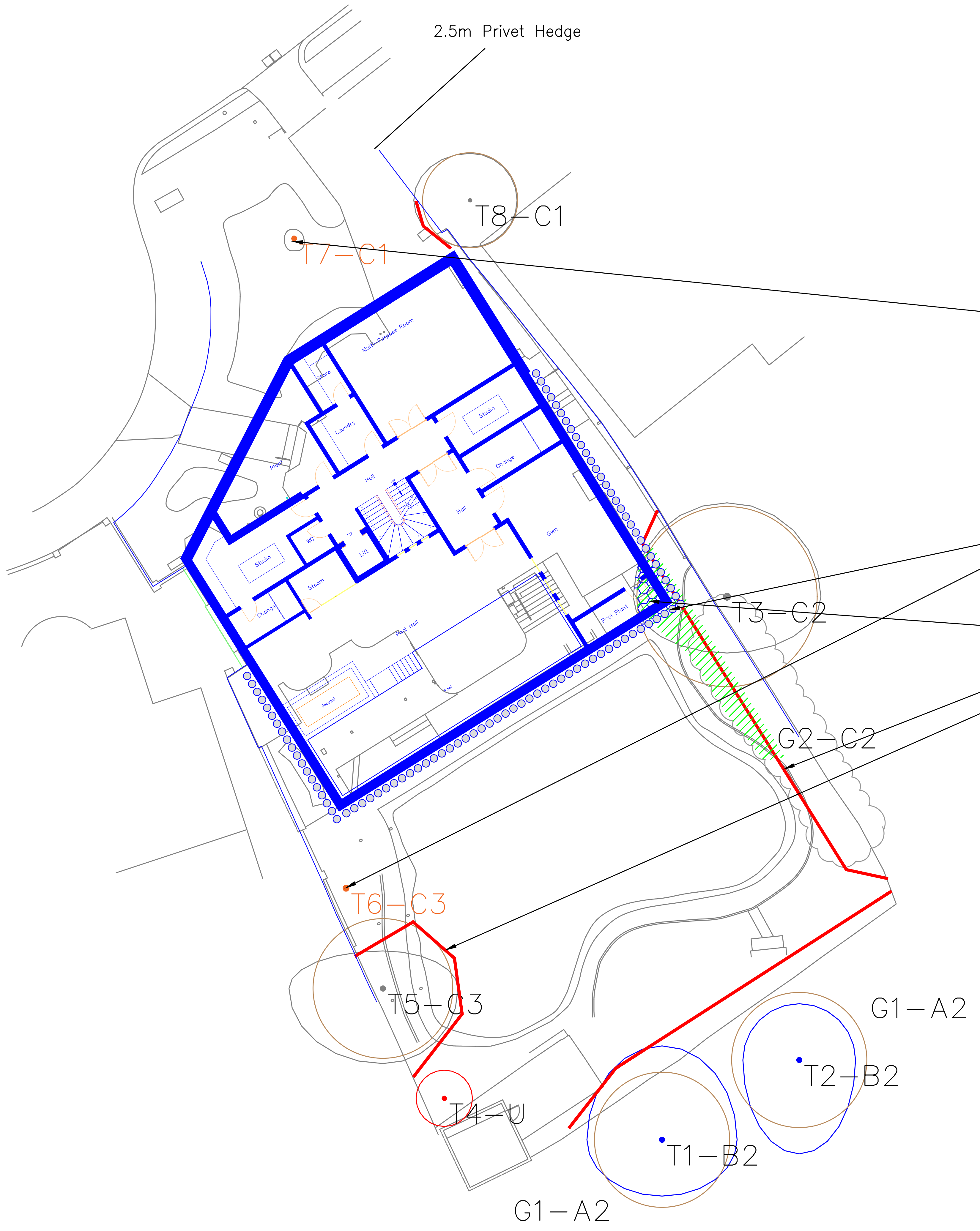

● **Tree Removals**:
T7 and T6 to be removed to facilitate the scheme; replacement tree detail to be included within the landscape scheme.

▨ **Tree Pruning**:
G2 and T3 to be pruned back to allow construction for proposed construction works.

🟥 **Protective Barrier Fencing (PBF):**
To comprise of 2m tall welded mesh panels on rubber or concrete feet. Panels are to be joined together using a minimum of two anti-tamper couplers, installed so that they can only be removed from inside the fence. The panels should be supported on the inner side by stabilizer struts, which should should be attached to a base plate and secured with ground pins. All weather notices should be erected at regular intervals on the weld mesh panels with words such as "Tree Protection Area - Keep out". See example on TPP.

Sensitive Ground Works:

▦ Excavation within the RPAs will be initially undertaken by hand under direct on-site arboricultural supervision to a minimum of 750mm deep of any excavation, whether for proposed foundations, hard surfacing or underground services. The soil is to be loosened with the use of a fork or pick and then cleared with the aid of an air-spade and air-vac. All roots to be cut will be cleanly severed with the use of a hand saw or secateurs. The edge of the excavation closest to the retained trees will be covered over with damp hessian to prevent drying out, and where necessary be shuttered to prevent soil collapse or contamination by concrete. If appropriate soil beneath the depth 750mm may be sheet piled, regular piled or individual piles. Any deeper excavations may be undertaken by a machine provided it works from outside of the RPA or has appropriate ground protection in place to move and work upon.

KEY

○○○○ Tree Crown Spread
○ Root Protection Area (RPA)
●●●● Tree Stem
T1 Tree No.
● Removed Tree

Tree Condition Category

● A
● B
● C
● U

The surveyed trees are illustrated on this Constraints Plan which is prepared in accordance with British Standard BS5837: 2012 'Trees in Relation to Design, Demolition and Construction – Recommendations'

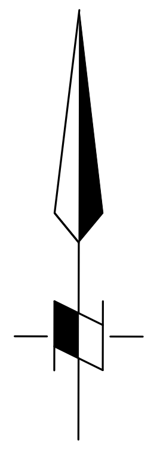
Indicative

Figure 3 **Examples of above-ground stabilizing systems**

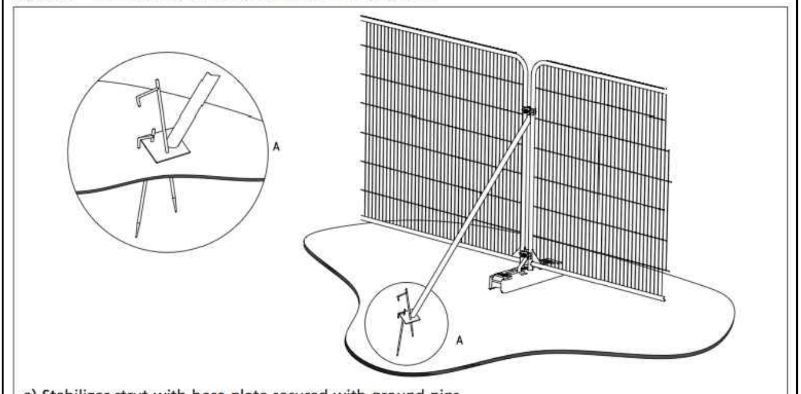

a) Stabilizer strut with base plate secured with ground pins

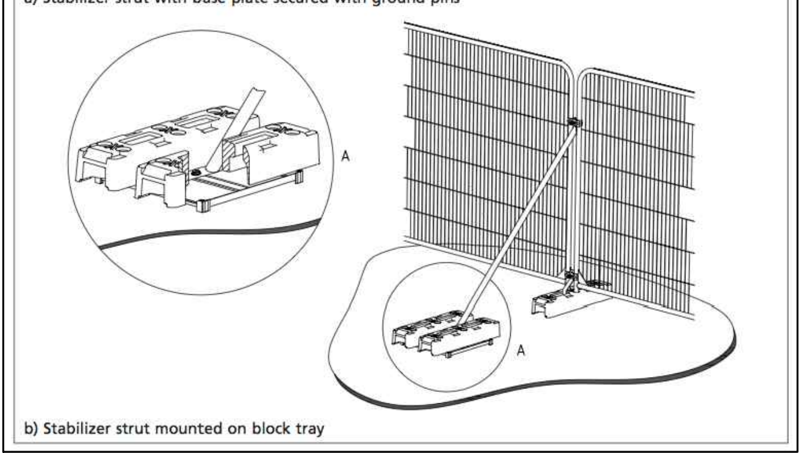

b) Stabilizer strut mounted on block tray


PROTECTIVE FENCING. THIS FENCING MUST BE MAINTAINED IN ACCORDANCE WITH THE APPROVED PLANS AND DRAWINGS FOR THIS DEVELOPMENT.


TREE PROTECTION AREA
KEEP OUT !
(TOWN & COUNTRY PLANNING ACT 1990)
TREES ENCLOSED BY THIS FENCE ARE PROTECTED BY PLANNING CONDITIONS AND/OR ARE THE SUBJECTS OF A TREE PRESERVATION ORDER.
CONTRAVENTION OF A TREE PRESERVATION ORDER MAY LEAD TO CRIMINAL PROSECUTION

ANY INCURSION INTO THE PROTECTED AREA MUST BE WITH THE WRITTEN PERMISSION OF THE LOCAL PLANNING AUTHORITY

DO NOT SCALE FROM DRAWING

The original of this drawing was produced in colour – a monochrome copy should not be relied upon.

REV.	DESCRIPTION	DWN	CHK'D	DATE
B	Uses TCP_Rev.A as base	TB	AT	11/10/24
A	Based on TCP 231829 & 2333-PL-199-0_Proposed Site Plan	RB	TB	17/7/24
	Based on TCP 231829 & 2333-PL-200-0_Proposed Plans	RB	TB	8/4/24

CLIENT
Wolff Architects Ltd

PROJECT
231829/TPP/A1
45 Elsworthy Road, NW3 3BS

TITLE
Tree Protection Plan

DWN	DATE	CHK'D	DATE	APP'D	DATE	SCALE
RPHB	8/4/2024	AT	8/4/2024			1–200

Indigo Surveys Ltd
(Mail) Second Floor, 1 Hunter's Walk, Canal Street, Chester. CH1 4EB
Telephone: 0333 123 7080 www.indigosurveys.co.uk

Drawing Number A1
231829/A2/TPP/01
REV. B