Existing Timber
Window and Door - Single Glazed

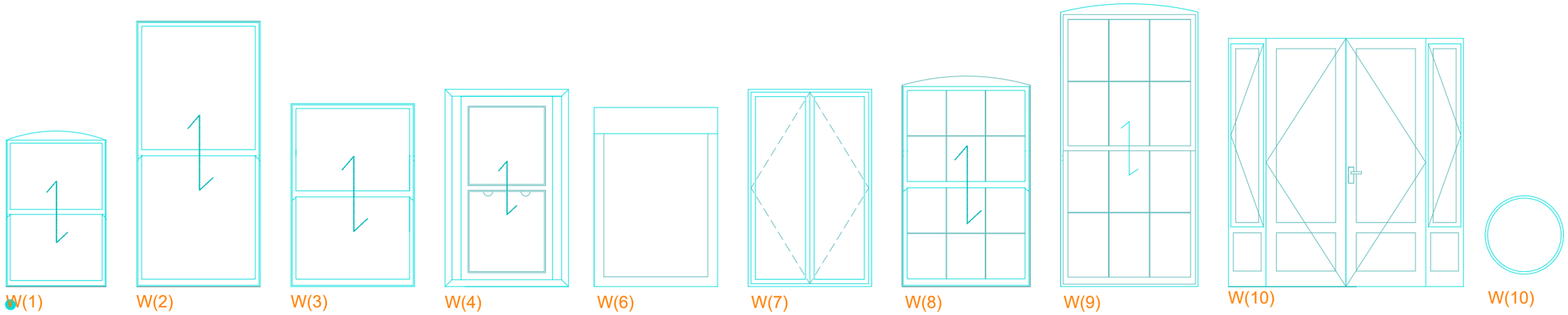

Proposed Timber
Window and Door - Double Glazed

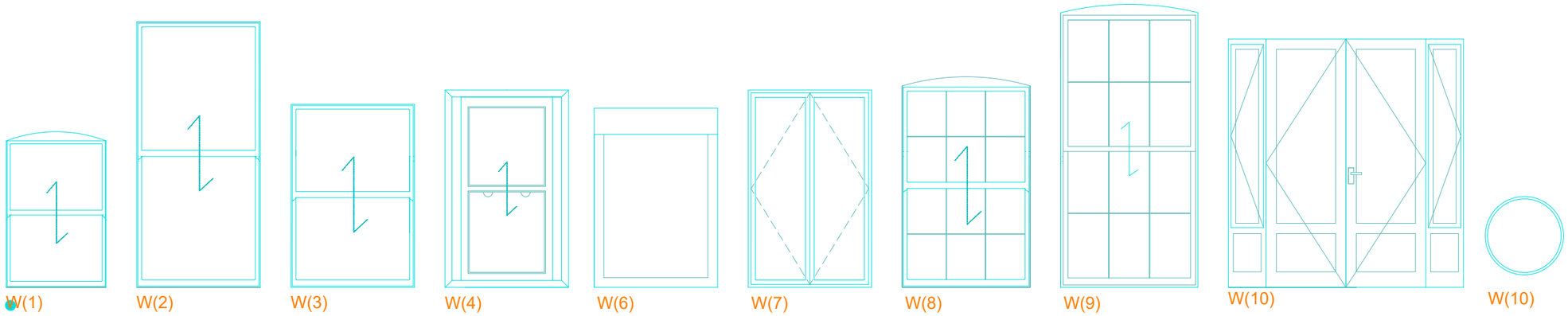

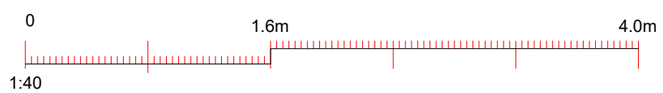

REVISION	D	C	DATE

The contractor is responsible to ensure that no products are to be utilised that do not comply with relevant British and/or European Standards and/or Codes of Practice, COSHH Regulations, Construction Regulations, or which are known or suspected at the time of product selection and/or construction to be deleterious to health and safety or to the durability of the work or not in accordance with good building practices.

The contractor is responsible for checking dimensions, tolerances, levels and references. This drawing is to be read in conjunction with all relevant consultants or specialists drawings. Any discrepancy to be notified to Baily Garner LLP and rectified before proceeding with the works on site or shop drawings.

Where an item is covered by drawings to different scales, the larger scale drawing is to be worked to.

Do not scale drawings. Figured dimensions to be worked to in all cases.

This drawing and the copyrights and patents therein are the property of Baily Garner LLP and may not be used or reproduced without consent or attribution.

A3

CLIENT.
Origin Windows Housing Association

ADDRESS.
54 Crowndale Road
London
NW1 1TP

PROJECT.
Window Replacement Programme

TITLE.
Window Schedule

PURPOSE OF ISSUE.
Planning

SCALE.	D	C	DATE
1:40	CV		02/09/2024

JOB NO.	DRAWING No.	REVISION
35306	P 01	05

BAILY GARNER
146-148 ELTHAM HILL
LONDON SE9 5DY
t. 020 8294 1000
f. 020 8294 1320
e. general@bailygarner.co.uk