42 HOLBORN

BUILT UP ALUMINIUM LETTERS & NUMBERS
• POWDER COATED RAL 5001
• 40mm RETURNS
• STUD FIXING TO BE ACCEPTED ON
ALUMINIUM CHANNEL WALL FIXING

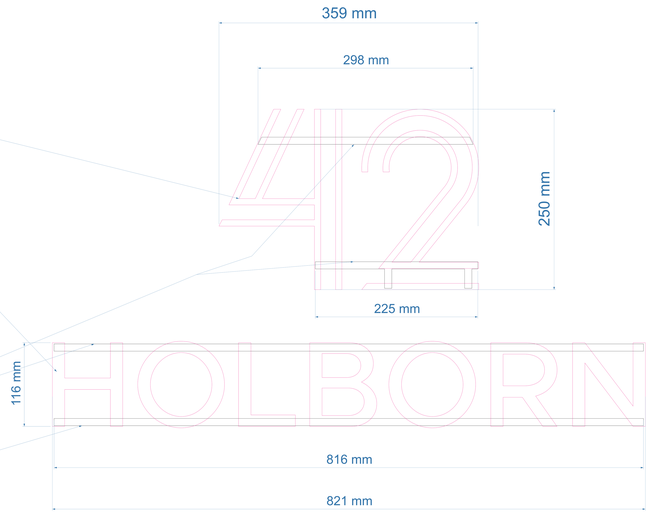

ALUMINIUM U CHANNEL WALL FIXING
• POWDER COATED TO MATCH WALL (TBC BY CLIENT (AS CLOSE AS WE CAN))

ALUMINIUM U CHANNEL FIXING TO WALL USING
• 4 x 80mm SCREWS + PLASTIC WALL PLUGS
• EACH CHANNEL WILL BE FIXED INTO THE GROOVES OF THE WALL
• EACH CHANNEL WILL HAVE 5 FIXING POINTS (LETTERS)
• EACH CHANNEL WILL HAVE 4 FIXING POINTS (NUMBERS)

STUD FIXING BACK OF LETTERS TO BE ALINED TO FIX THE U CHANNEL
• STUD TO BE SOLDERED BACK OF THE LETTER & NUMBERS
• LETTERS TO BE FIXED TO U CHANNEL BY COUNTER SINK HEAD BOLT

BACK TRAY OF THE LETTERS
• STUD FIXING TO BE SOLDERED ON TO THE BACK TRAY
• LETTERS WILL BE FIXED ON THE BACK TRAY (THIS SEATS INSIDE THE BUILT UP LETTERS

BUILT UP ALUMINIUM LETTERS & NUMBERS
• POWDER COATED RAL 5001
• 40mm RETURNS
• STUD FIXING TO BE ACCEPTED ON
ALUMINIUM CHANNEL WALL FIXING