Legend

- 8mm thick studded floor membrane on insulation
- 8mm thick studded membrane on all external and internal brickwork walls (1.5m high cavity drain membrane)
- 8mm thick studded membrane on all external and internal brickwork walls (full height cavity drain mesh membrane)
- 50mm high pre-formed perimeter channels and flushing points as per approved installer's details
- ACO drain along lightwell walls
- French drain with access points

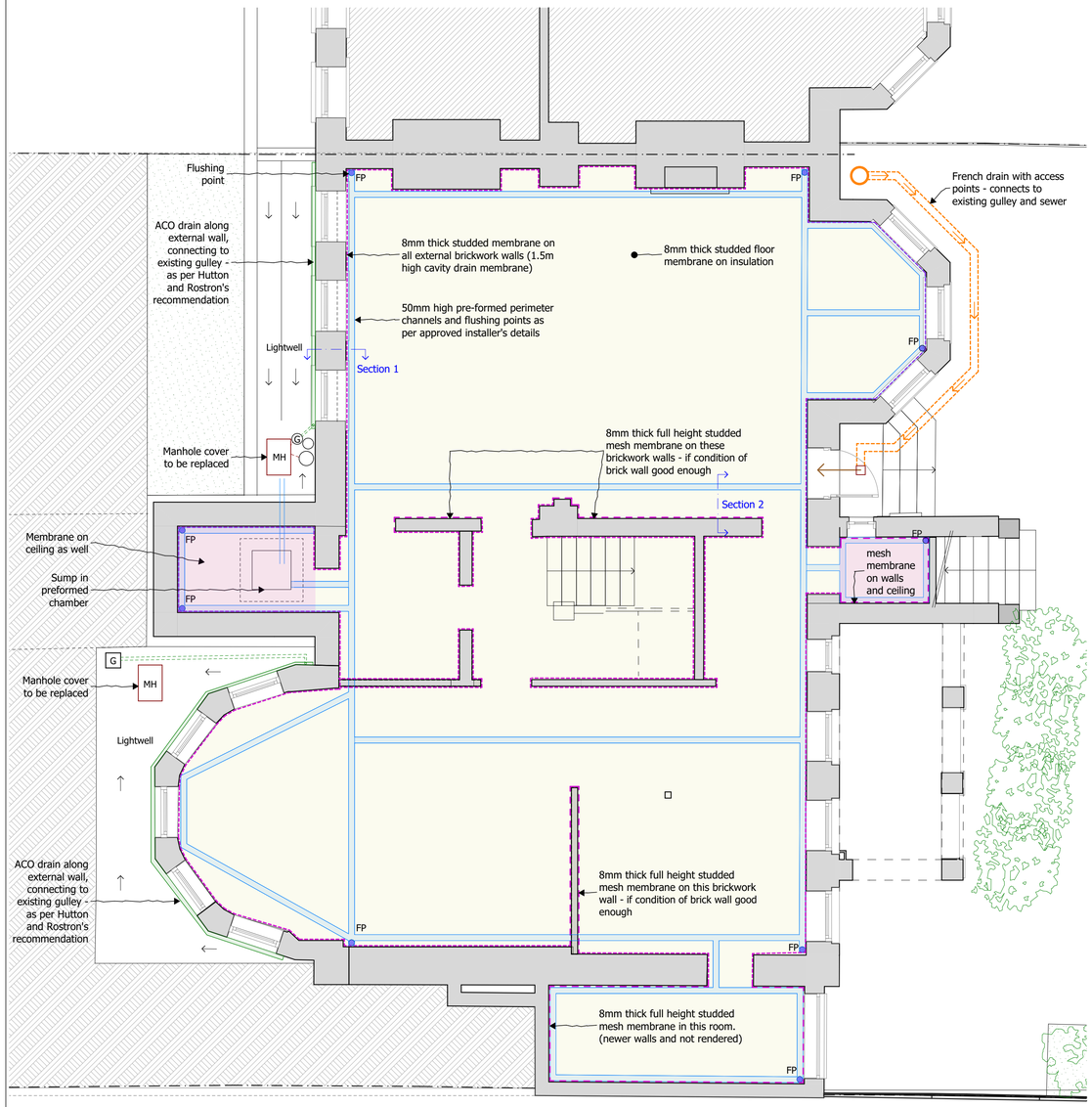

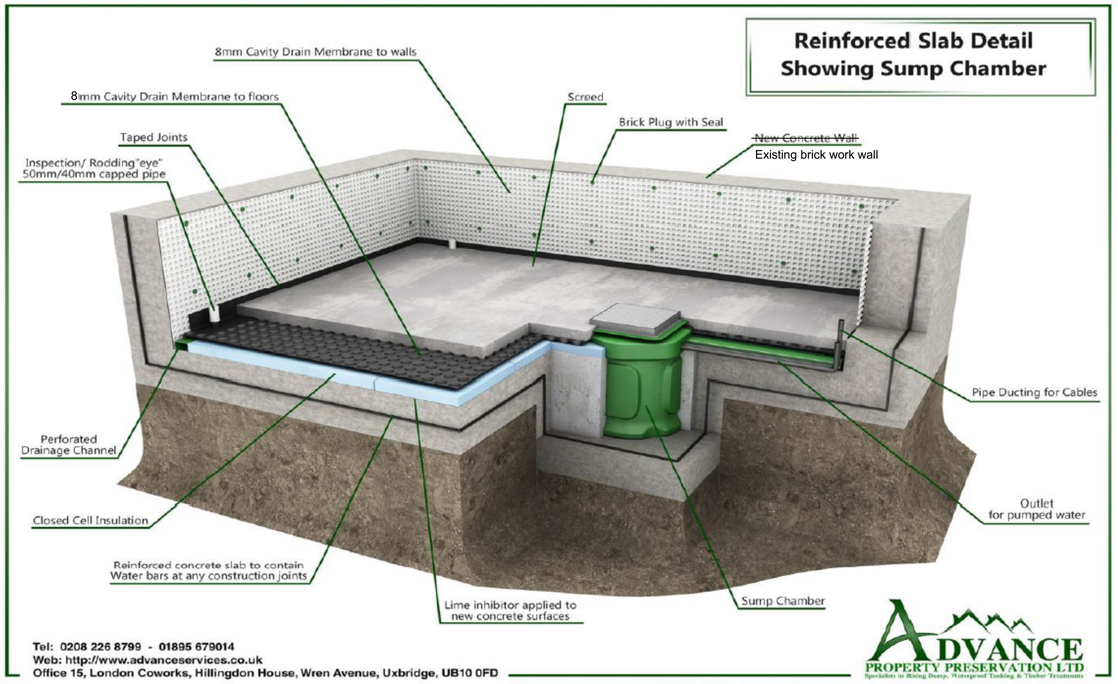

3.3.2 Standard 50mm wastewater pipe intakes

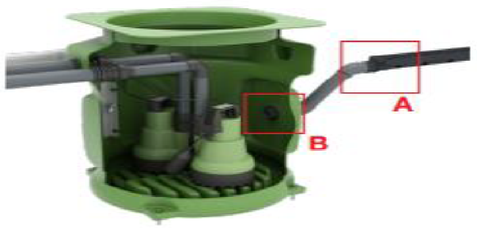

A

Connect the Wykamol Floor Drain drainage channel to a 50mm ABS wastewater pipe via a 50mm channel outlet piece.

B

Connect the 50mm ABS wastewater pipe to one of the chamber's inlet facias using a 50mm rubber wall seal.

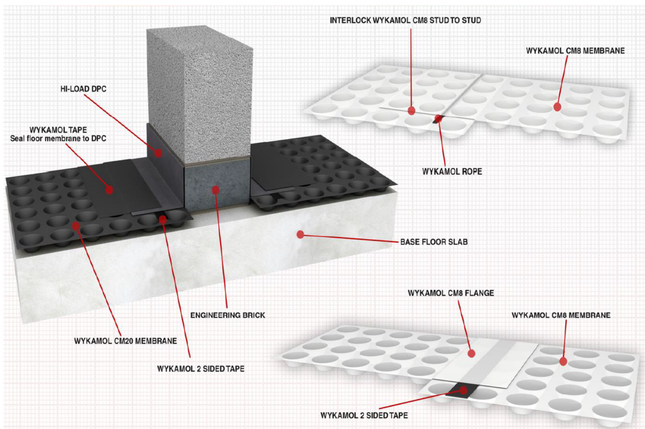

3.4 Positioning the discharge pipework

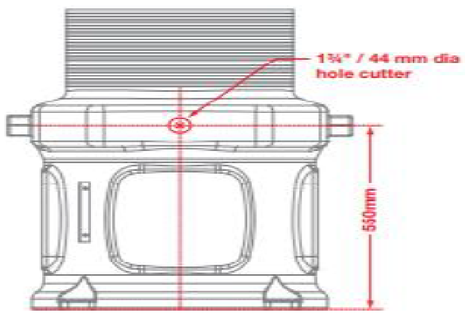

SINGLE DISCHARGE

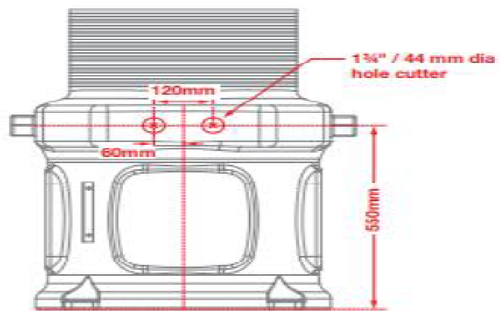

TWIN DISCHARGE

This drawing is not to be scaled for construction purposes. All dimensions are to be checked on site before any work is put in hand.
If in doubt, ask.

Copyright © **4H** Architecture Limited 2024
Registered in England & Wales.
Registered No. 12112149
4H is the trading name of **4H** Architecture Limited

Design and details based on information from Tanking consultant
Advance Property Preservation Ltd.

Rev	Date	Descriptor
LBC01	18.05.2024.	Listed Building Consent

project
131_9 Wedderburn Road

site address
9 Wedderburn Road
London
NW3 5QS

client
Private Client

drawing title
Tanking 01 - Plan

project number_drawing number_revision
131_410_LBC01

date
18.05.2024.

designed / drawn by
4H Architecture
07515772458
info@4harchitecture.co.uk

scale
0 1 scale 1:50 2.5m