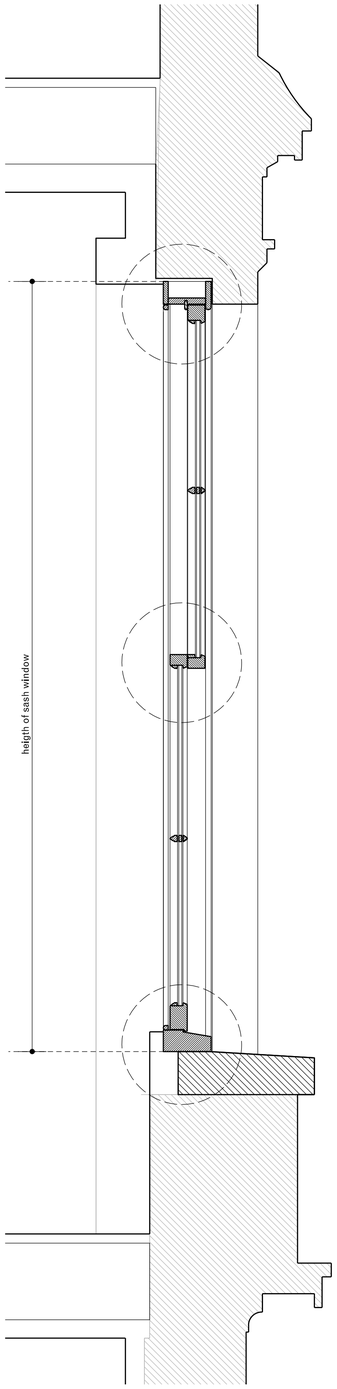

01 31_01 Section
1:5

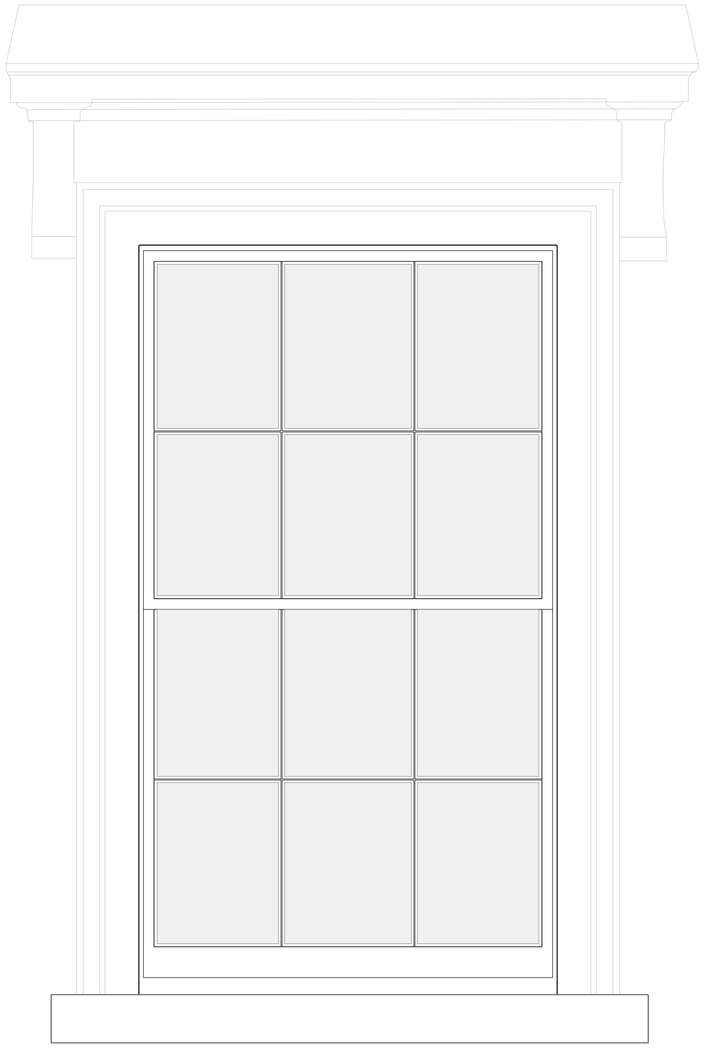

02 31_01 Elevation outer
1:5

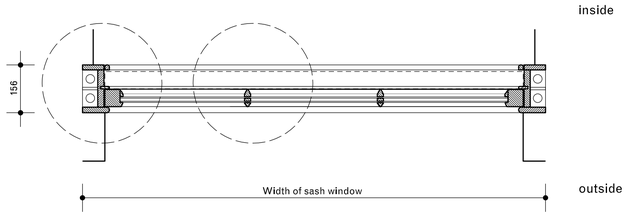

03 31_01 Plan
1:5

Painted timber sash window
Double glazed with Ovolo mould glazing bars

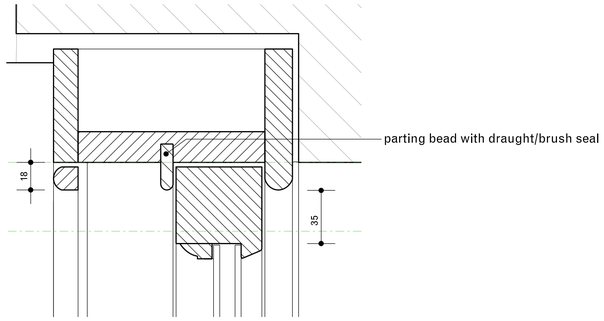

D1 31_01 Head
Detail 1:2

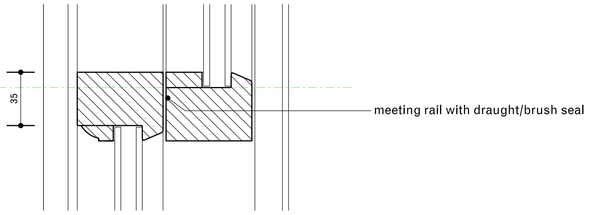

D2 31_01 Meeting rail
Detail 1:2

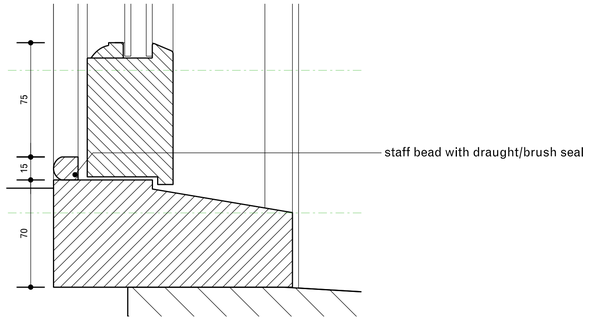

D3 31_01 Cill
Detail 1:2

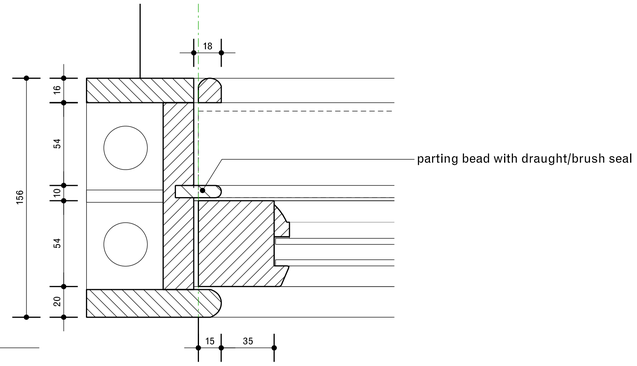

D4 31_01 Box
Detail 1:2

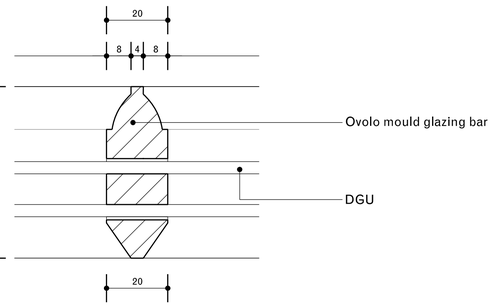

D5 31_01 Glazing bar
Detail 1:1

Comments:

Notes:

000	critical dimension
>000	minimum dimension
[000]	check dimension (deviation of more than 10mm must be reported to CA/Architect)

General notes:

Do not scale from drawings.
Errors to be reported immediately to the Architect.
To be read in conjuntion with all relevant Architects', Services and Structural Engineers' drawings.
All existing site, tree and building information has been compiled from different sources.
All dimensions to be checked on site.

Existing
New

Rev.	Date	Description	Drawn	Check
*	03/04/24	Issued for Planning	NVDG	JPC

0 0.5 1.5m 1:25@A1

N

WENDOVER
_STUDIO

7 Cambridge Gate
London NW1 4JX
wendoverpartners.com

Project
5 ALBERT TERRACE

Project number
029

Client
L. SALEM

© Wendover Studio Ltd.

Drawing name
Typical window detail
Sash window
(Shown is W102)

Drawing number
31_01_P

Date	03/04/2024	Issue	*
Scale / Format	1:5 / 1:2 A1		
Drawn / Checked		Planning	
Approved			
CAD Reference	029_31_01_P		