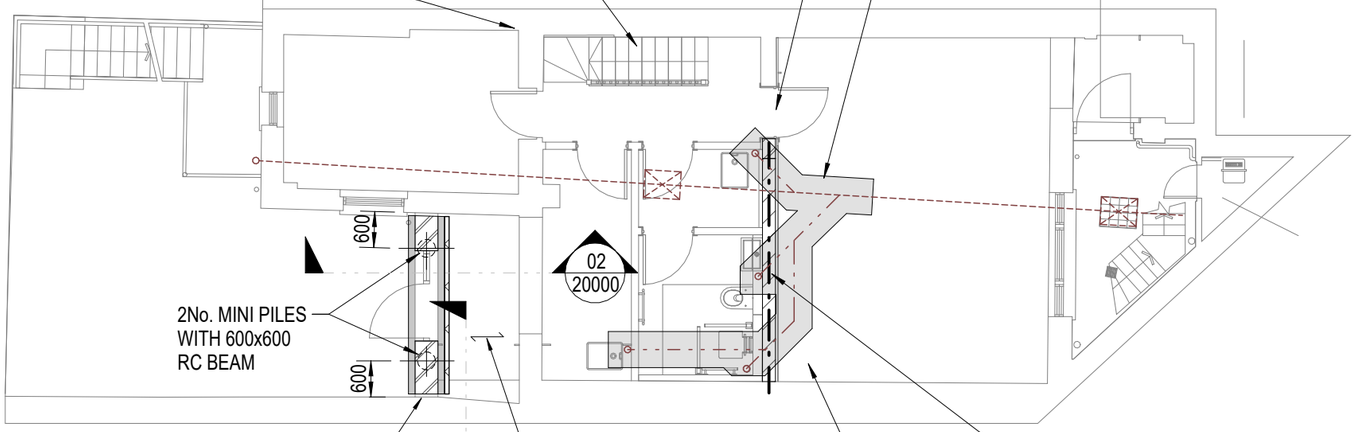

NEW TIMBER STAIR

BUILDERSWORK PRECAST LINTEL REQUIRED OVER NEW OPENING FOR DOORWAY

SHADED AREA INDICATES AREA OF EXISTING FLOOR TO BE BROKEN OUT TO LAY NEW DRAINAGE. EXISTING FLOOR BUILD UP TO BE INSPECTED ON SITE. ALLOW FOR FLOOR TO BE REPAIRED WITH 150mm THICK RC SLAB WITH 12mm DIAMETER 450mm LONG DOWEL BARS AT 300 CENTRES DRILLED AND FIXED INTO SIDE OF EXISTING FLOOR WITH 150mm EMBEDMENT. WATERPROOFING TO ARCHITECTS DETAILS

BRICKWORK STITCH DETAIL REQUIRED TO STABILISE JOINT CAUSED BY MOVEMENT

NEW STEEL AND TIMBER STAIRS TO BE DESIGNED BY SPECIALIST SUBCONTRACTOR

2No. MINI PILES WITH 600x600 RC BEAM

EACH END OF NEW WALL TO BE TIED TO EXISTING WALLS WITH A PROPRIETARY WALL TIE SYSTEM SUCH AS FURFIX

NEW BEAM AND BLOCK FLOOR TO ARCHITECTS DETAILS

EXISTING 260mm DEEP UB STEEL BEAM OVER TO REMAIN. CONTRACTOR TO PROP DURING CUTTING OF NEW DOOR OPENING INSTALLATION OF NEW WALL AND DOOR LINTELS

NEW 215 DENSE CONCRETE BLOCKWORK WALL TO BE BUILT OFF EXISTING FOOTING (TO BE CONFIRMED) AND PACKED TO UNDERSIDE OF EXISTING STEEL BEAM TO PROVIDE SUPPORT TO BEAM. WALL TO BE TIED INTO EXISTING WALLS AT EACH END

LOWER GROUND FLOOR

(1 : 100)

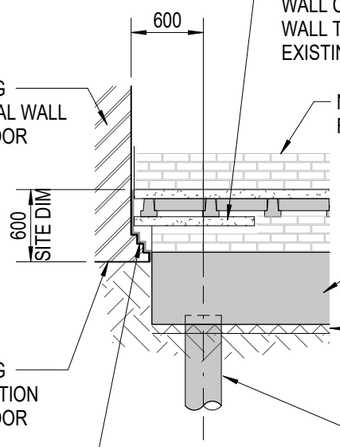

75mm DEEP PRECAST CONCRETE LINTELS TO SUIT WALL CONSTUCTION IN REAR WALL TO CANTILEVER OVER EXISTING FOUNDATION

EXISTING EXTERNAL WALL NEXT DOOR

NEW EXTENSION REAR WALL

NEW 600x600wd PILED GROUND BEAM

75mm APPROVED COMPRESSIBLE TRENCH LINING (CLAYMASTER OR SIMILAR) TO BOTTOM AND SIDES OF BEAM

EXISTING FOUNDATION NEXT DOOR

NEW 300Ø MINI-PILE 600 FROM WALL FACE WITH 75mm CUT-OFF

25mm FLEXCELL COMPRESSIBLE JOINT BETWEEN NEW AND EXISTING

SECTION 01

(1 : 50)

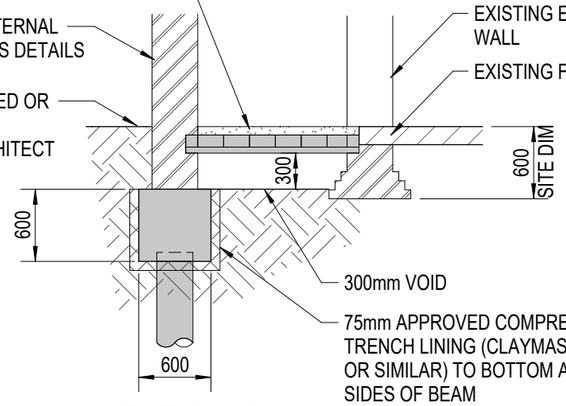

BEAM AND BLOCK FLOOR WITH SCREED TO ARCHITECT'S DETAILS

NEW EXTENSION EXTERNAL WALL TO ARCHITECTS DETAILS

PATIO TO BE LOWERED OR DAMP PROOF DETAIL DEVELOPED BY ARCHITECT

EXISTING EXTERNAL WALL

EXISTING FLOOR

300mm VOID

75mm APPROVED COMPRESSIBLE TRENCH LINING (CLAYMASTER OR SIMILAR) TO BOTTOM AND SIDES OF BEAM

SECTION 02

(1 : 50)

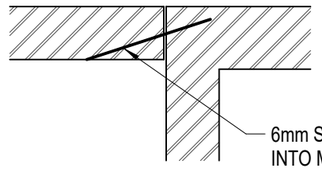

6mm SS HeliBar OR SIMILAR DOWELLED INTO MASONRY WALL AT AN ANGLE TO STITCH VERTICAL CRACK, THROUGH CENTRE OF BRICKS AND AT EVERY 4TH COURSE VERTICALLY.
HeliBond CEMENTITIOUS GROUT TO BE INJECTED INTO DRILLED HOLE PRIOR TO PLACEMENT OF BAR.
VERTICAL CRACK TO BE MADE GOOD USING CrackBond TE3.
INSTALLATION PROCEDURE TO BE AS PER MANUFACTURERS INSTRUCTIONS

BRICKWORK STITCH DETAIL

(1 : 25)

This drawing should not be scaled. Dimensions to be verified on site. Any discrepancies should be referred to the Engineer prior to work being put in hand.
This drawing is the property of Waterman Structures Limited and is issued on the condition that it is not copied, reproduced, retained or disclosed to any unauthorised person, either wholly or in part without the consent in writing of
Waterman Structures Limited
Pickfords Wharf Clink Street London SE1 9DG United Kingdom
t +44 20 7928 7888

General Notes

Rev	Date	Description	By	Chk
P02	09.01.24	AMENDED WHERE CLOUDED	SFM	SJN
P01	22.12.22	ISSUED FOR STAGE 2	SFM	SJN

Amendments

waterman
Pickfords Wharf Clink Street | London | SE1 9DG
t +44 20 7928 7888
mail@watermangroup.com www.watermangroup.com

Project: 28 CHALCOT SQUARE

Title: GENERAL ARRANGEMENT LOWER GROUND FLOOR

Client: -

Work Stage: STAGE 2 Concept design		RIBA
Suitability: REVIEW & COMMENT		S3
Designed By: Designer	Director: Checker	Waterman Ref.: STR18642
Drawn By: Author	Date	Scales @ A3: As indicated

Project | Originator | Functional | Spatial | Discipline | Role | Number: CHA-WAT-ZZ-LG-DR-S-20000

Revision: P02