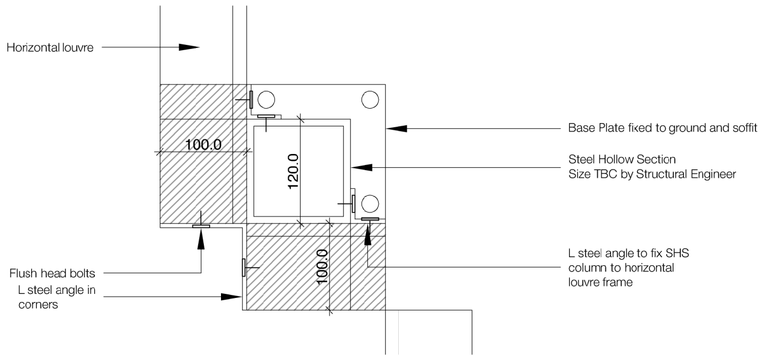

01 Typical Plan Detail - Corner
1:5

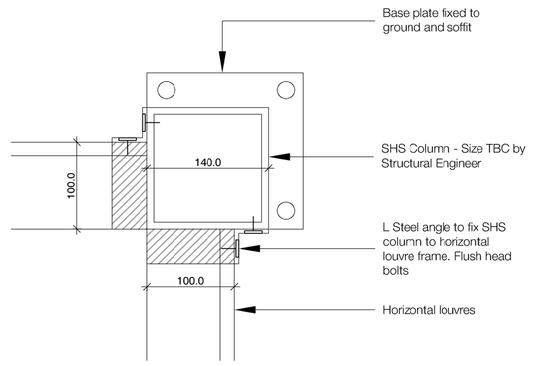

02 Typical Plan Detail - Corner Detail 02
1:5

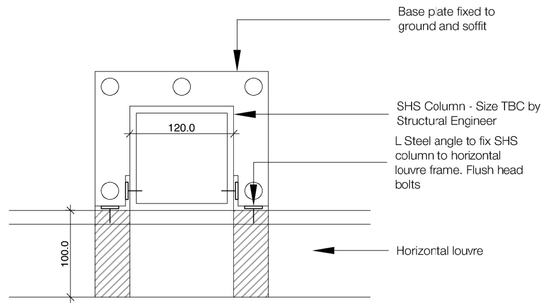

03 Typical Base Detail - Intermediate
1:5

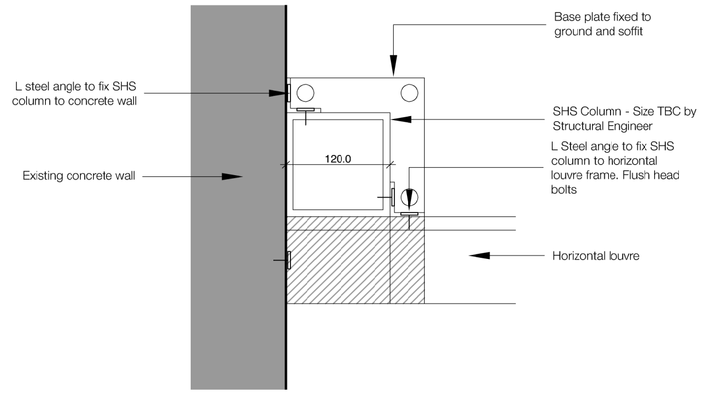

04 Typical Base Detail - End next to concrete wall
1:5

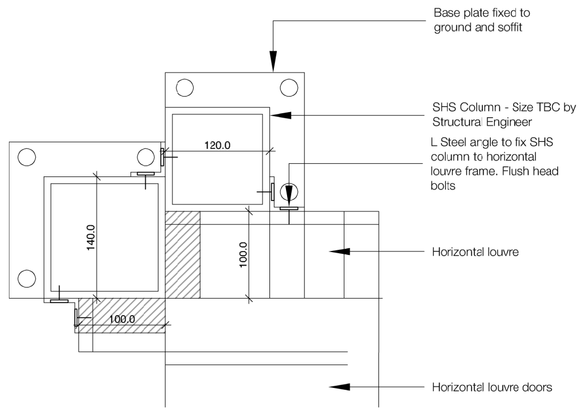

05 Typical Base Detail - Corner Detail 03

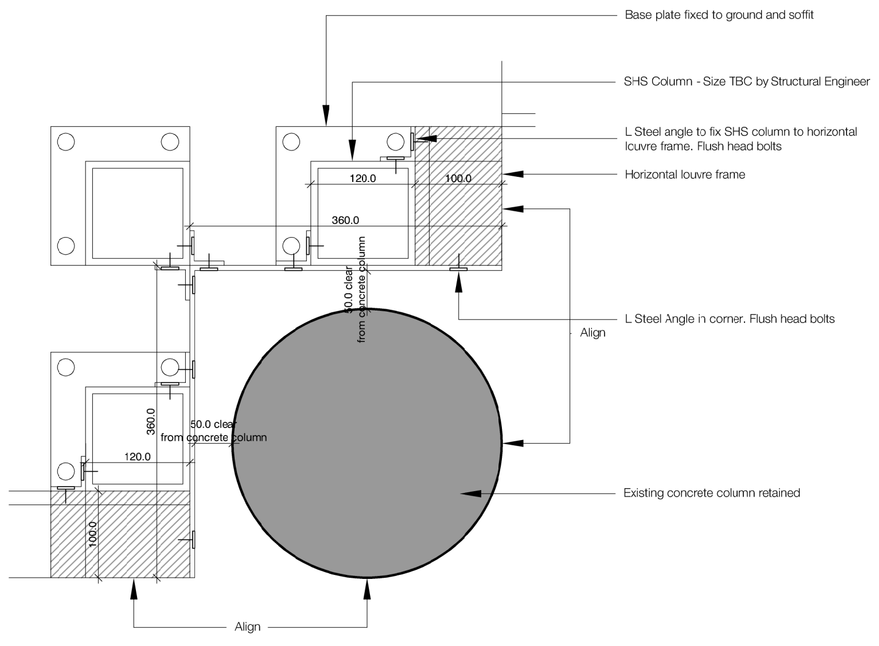

06 Typical Plan Detaill - Column Junction

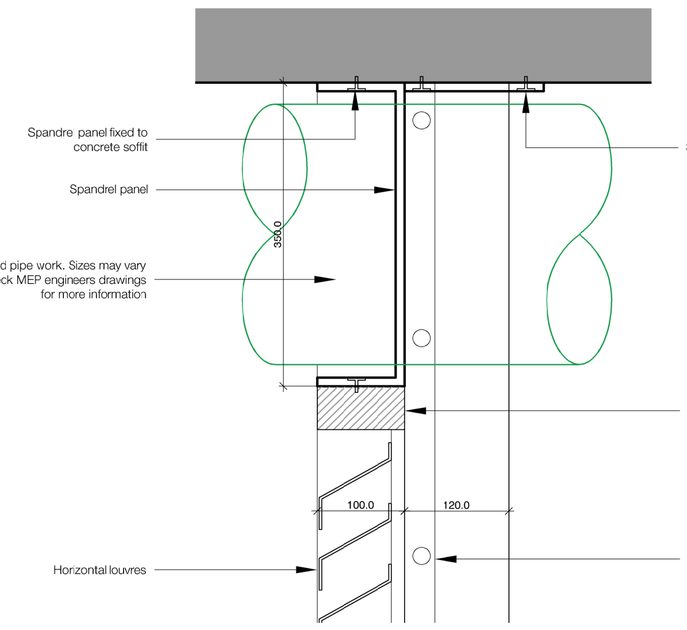

07 Typical Head Detail
1:5

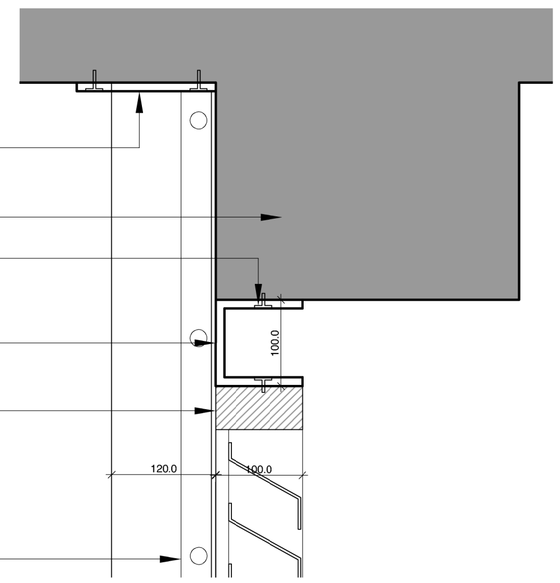

09 Typical Head Detail - Block A
1:5

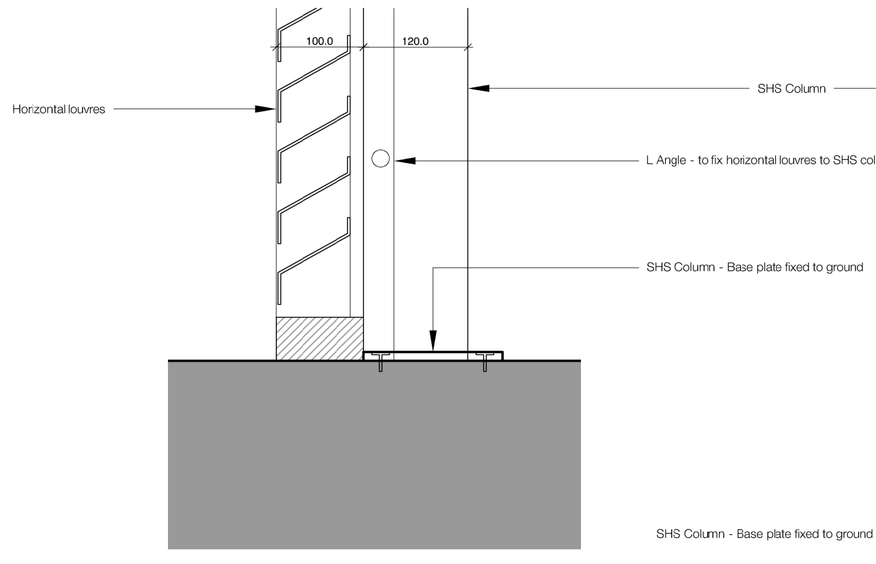

08 Typical Base Detail
1:5

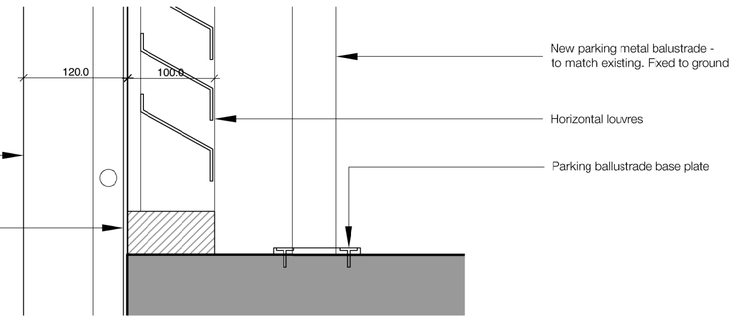

10 Typical Intermediate Detail - Block A
1:5

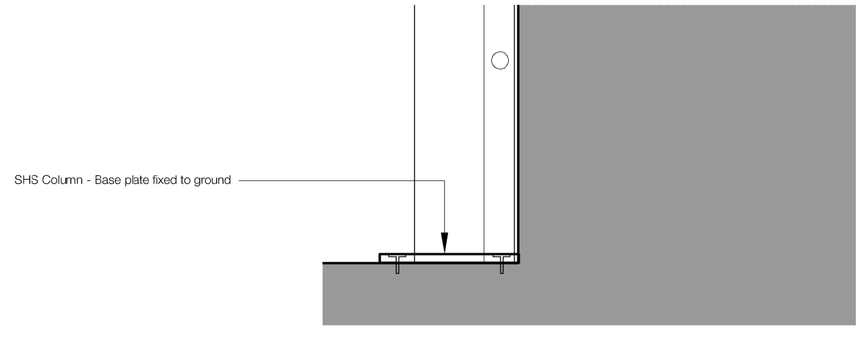

11 Typical Base Detail - Block A
1:5

Notes

1. Do not scale this drawing.
2. All dimensions must be checked on site and any discrepancies verified with the architect.
3. Unless shown otherwise, all dimensions are to structural surfaces.
4. Drawing to be read with all other issued information. Any discrepancies to be brought to the attention of the architect.
5. This drawing is the copyright of Levitt Bernstein and may not be copied, altered or reproduced in any form, or passed to a third party without license or written consent.

This is not a construction drawing, it is unsuitable for the purpose of construction and must on no account be used as such.

Rev	Date	Description	
P2	17.11.23	Planning & Listed Building Consent	KS
P1	07.04.22	For comment	KS

Project name

Alexandra Rd Estate

Heating Infrastructure

Drawing number: 3467_LB_331003 — Rev: P2

Drawing: Typical Louvre Details

Purpose of issue: PLANNING — Date: 17.11.23

Scale: 1.5 @ A1 — Drawn: KS

Client: Camden CC — Checked: PM

levittbernstein.co.uk

London
Thane Studios
2-4 Thane Villas
London N7 7PA
+44 (0)20 7275 7676

Manchester
Eastgate
2 Castle Street
Manchester M3 4LZ
+44 (0)16 1989 8740