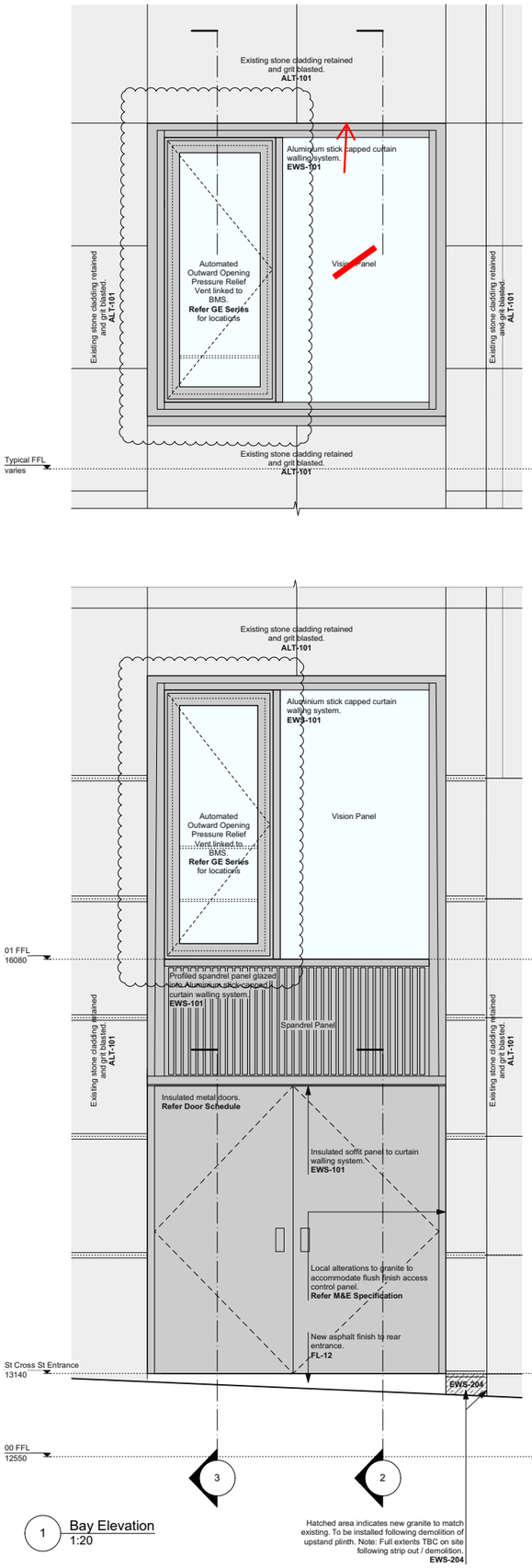

1 Bay Elevation
1:20

Hatched area indicates new granite to match existing. To be installed following demolition of upstand plinth. Note: Full extents TBC on site following strip out / demolition. EWS-204

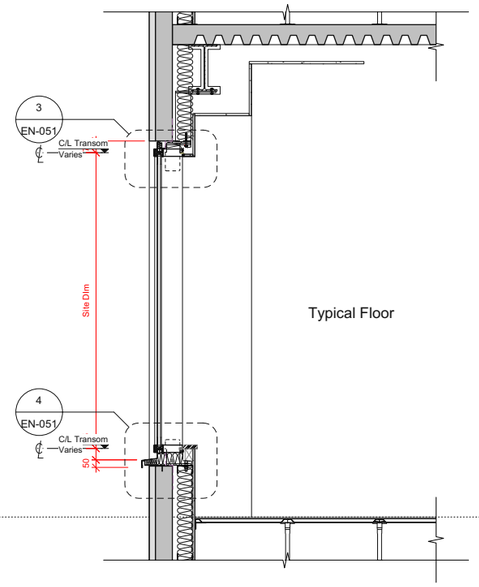

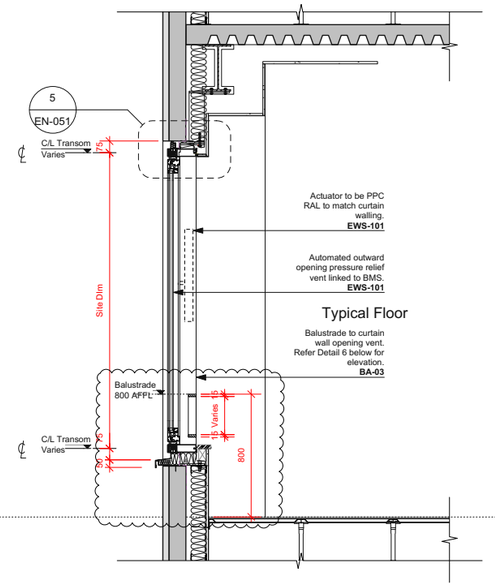

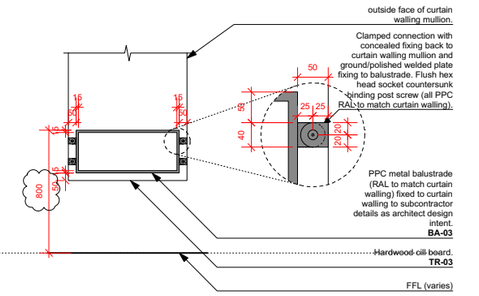

6 Typical Pressure Relief Vent Balustrade Internal Elevation
1:20

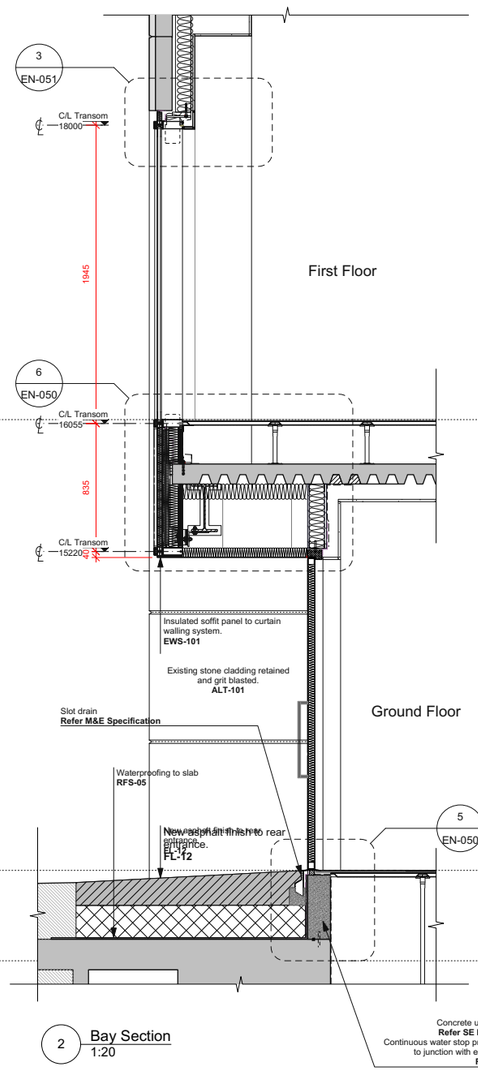

2 Bay Section
1:20

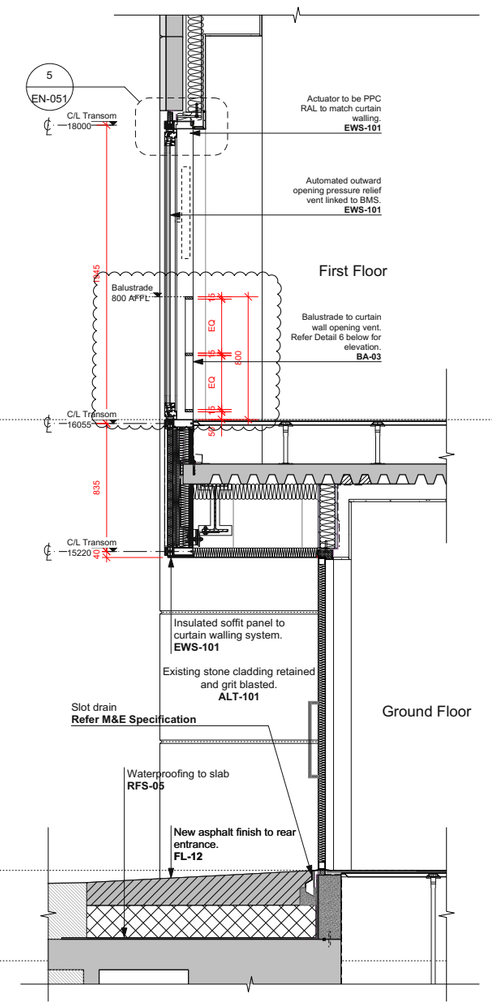

3 Bay Section
1:20

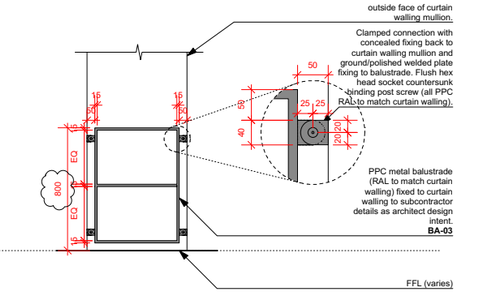

5 1st Floor Pressure Relief Vent Balustrade Internal Elevation
1:20

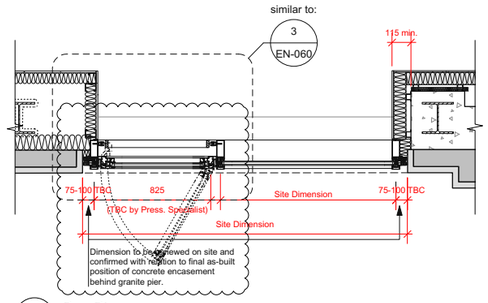

4 Bay Plan
1:20

GENERAL NOTES.

All dimensions to be checked on site prior to commencement of any works, and/or preparation of any shop drawings.

Sizes of and dimensions to any structural elements are indicative only. See structural engineers drawings for actual sizes / dimensions.

Sizes of and dimensions to any service elements are indicative only. See service engineers drawings for actual sizes and dimensions.

This drawing to be read in conjunction with all other Architect's drawings, specifications and other Consultants' information.

All proprietary systems shown on this drawing are to be installed strictly in accordance with the Manufacturers/Suppliers recommended details.

Any discrepancies between information shown on this drawing and any other contract information or manufacturers/suppliers recommendations is to be brought to the attention of the Architect

DO NOT SCALE FROM THIS DRAWING.

NOTES.

This drawing is based on a measured survey carried out by others.

This drawing is for tender purposes only. Do not build from this drawing. All Dimensions TBC on site.

All levels to be checked on site prior to fabrication. Any discrepancies to be brought to the attention of the Architect.

All existing structure assumed and subject to verification on site.

All curtain walling fixing details and brickwork support angles to subcontractor design.

Subcontractor to review and confirm insulation thickness required to meet u-value requirements.

All Glazing is **GL-01** unless stated otherwise.

STATUS	REVISION	DATE
T2	TENDER ADDENDUM ISSUE Pressure Relief Vents handed as per specialist advice. Balustrades at glazing dropped to 800mm as per MLM advice for building regulations compliance.	16/01/18
T1	TENDER ISSUE	24/11/17

Buckley Gray Yeoman
Studio 4.04 The Tea Building 56 Shoreditch High Street
London E1 6JJ T: 020 7033 9913 F: 020 7033 9914

CLIENT	Orchard Street Investment Management
PROJECT	75 Farringdon Road
DRAWING	Building Envelope Non-typical Bay (South)
SCALE	1:20@A1 1:40@A3
DATE	Aug 2017
DRAWN BY	HP
DWG No.	952_EN-026
REVISION	T2
DRAWING STATUS	TENDER

Information contained on this drawing is the sole copyright of Buckley Gray Yeoman and is not to be reproduced without their permission.