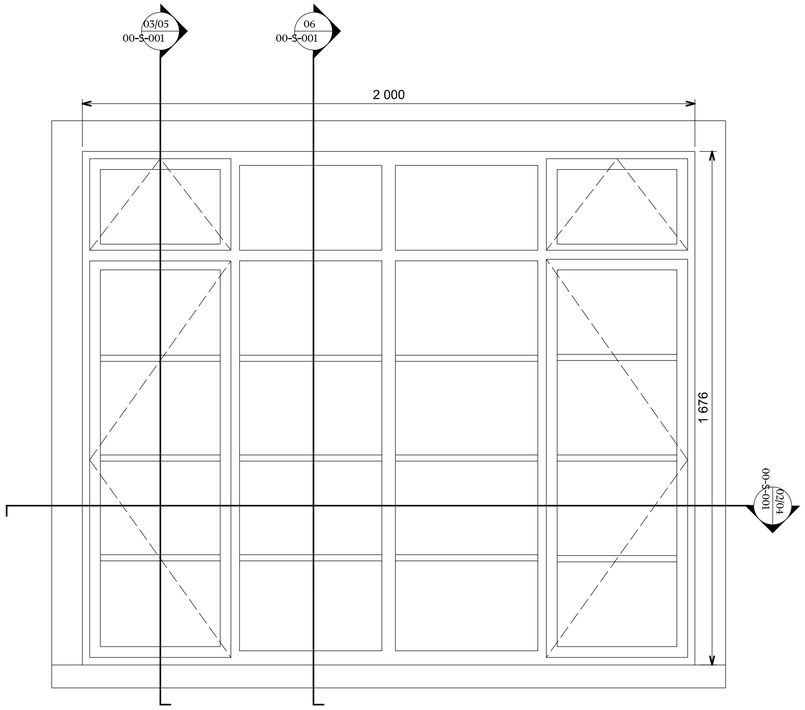

01 EXISTING ELEVATION 1:10

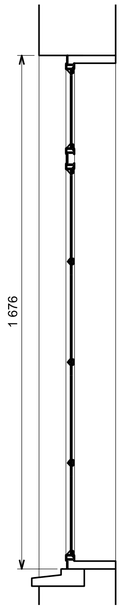

03 EXISTING SECTION 1:10

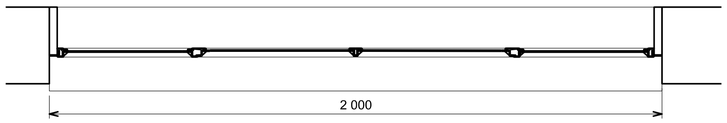

02 EXISTING PLAN 1:10

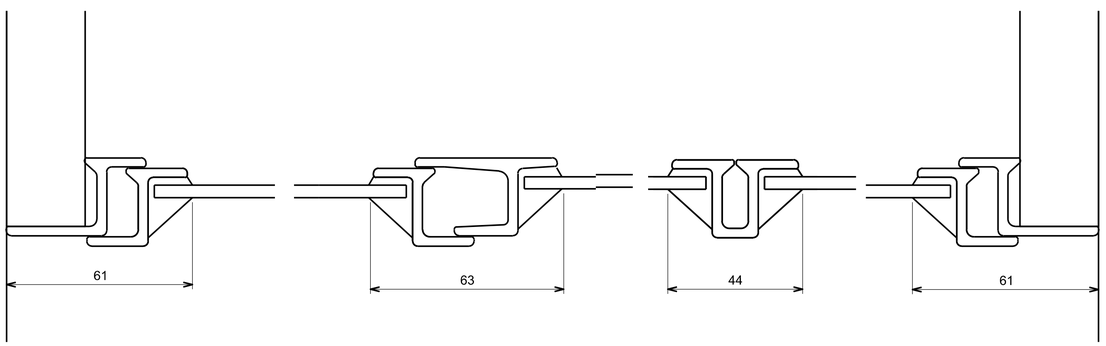

04 EXISTING PLAN 1:1

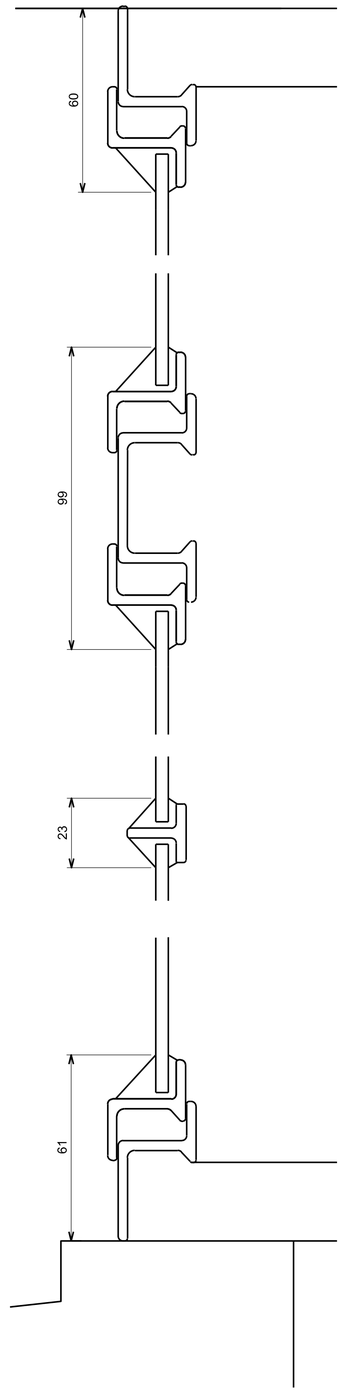

05 EXISTING SECTION 1:1

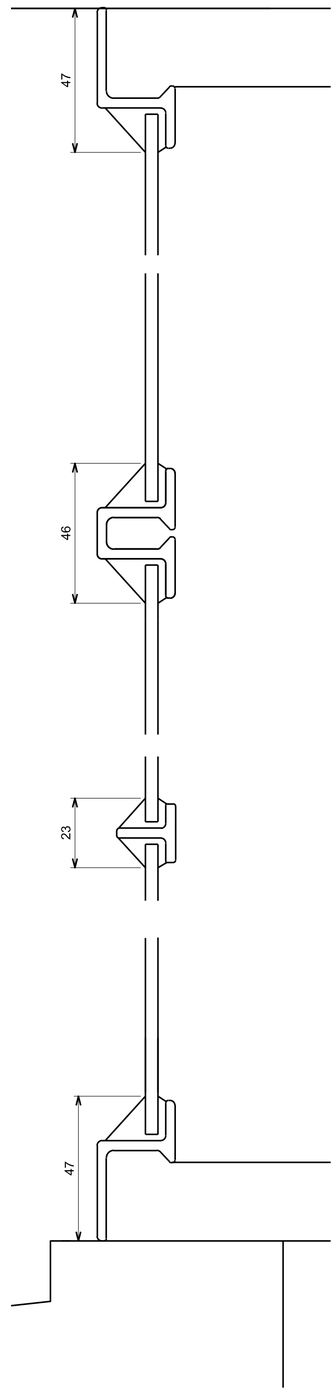

06 EXISTING SECTION 1:1

DO NOT SCALE

THE CONTRACTOR IS TO CHECK AND VERIFY ALL BUILDING AND SITE DIMENSIONS, LEVELS AND SEWER INVERT LEVELS AT CONNECTION POINTS BEFORE WORK STARTS.

THIS DRAWING IS TO BE READ AND CHECKED IN CONJUNCTION WITH ENGINEERS AND OTHER SPECIALIST DRAWINGS.

THE DRAWING AND THE WORKS DEPICTED ARE THE COPYRIGHT OF STUDIO DJL AND MAY NOT BE REPRODUCED EXCEPT BY WRITTEN PERMISSION.

NOTES

TO BE READ IN CONJUNCTION WITH GA PLANS, SECTIONS AND ELEVATIONS.

THIS DRAWING HAS BEEN PREPARED SOLELY FOR LISTED BUILDING CONSENT AND IS NOT TO BE USED FOR ANY OTHER PURPOSE.

DIMENSIONS NOTED ARE INDICATIVE. ALL WALL, FLOOR AND ROOF THICKNESSES AND SETTING OUT TO BE CONFIRMED BY CONTRACTOR.

STUDIO DJL

REV	DATE	DESCRIPTION

Flat 36, Regency Lodge

STUDIO DJL
23 Hilldrop Road
BR1 4DB
Danny@studiodjl.com www.studiodjl.com

JOB 2319

DRG
EXISTING WINDOW ELEVATIONS AND SECTIONS

DRG No 2319_DJL_00_S_001 REV -

SCALE VARIES DATE 10-07-23

DRAWN BY DL INSPECTED BY

DRAWING STATUS PLANNING